Coconino County, Arizona

Zoning Ordinance

An ordinance of the board of supervisors of coconino county adopting the zoning ordinance of the county of coconino setting forth new provisions establishing land use classifications; dividing the county into zones; adopting a map of said land use zones; imposing regulations for the promotion of health, safety, convenience and general welfare; concerning the use of land for residential and non-residential purposes; regulating and limiting the height and bulk of buildings and other structures; limiting lot occupancy and the size of yards and other open spaces; establishing standards of performance and design; prescribing procedures for changes of zone; conditional use permits, variances, or other permits; prescribing penalties for violations of said ordinance; and, repealing the previous zoning ordinance as adopted june 3, 1974 with all subsequent amendments thereto.

The board of supervisors of coconino county does ordain that the zoning ordinance of the county of coconino is hereby adopted to

read as follows:

Chapter 1. General Provisions

Section 1.1: Purpose and Scope

For the purpose of implementing the goals, objectives and policies of the Coconino County Comprehensive Plan, to promote and protect the public health, safety, convenience and general welfare of the people of the County of Coconino, to safeguard and enhance the appearance and quality of development of Coconino County, and to provide for the social, physical and economic advantages resulting from comprehensive and orderly planned use of land resources, a Zoning Ordinance establishing classifications of Zones, and regulations within those Zones hereby is established and adopted by the Board of Supervisors.

Section 1.2: Private Agreements

The provisions of this Ordinance are not intended to abrogate any Easements, covenants, or other existing agreements which are more restrictive than the provisions of this Ordinance.

Section 1.3: Conflicting Ordinances and Regulations

Section 1.3.A: Conflicting Ordinances

Whenever the provisions of this Ordinance impose more restrictive regulations upon Buildings or Structures and the Use of them or the Use of lands or premises and require larger open space or Setbacks than are imposed or required by other ordinances, the provisions of this Ordinance or rules or regulations promulgated thereunder shall govern.

Section 1.3.B: Conflicting Regulations

In the event of conflict between the regulations set forth in this Ordinance and any other regulations applicable to the same area, the more stringent limitation and requirement shall govern.

Section 1.4.A: Division of County into Zones

In order to classify, regulate, restrict and separate the Use of land, Buildings and Structures and to regulate and to limit the type, height, and bulk of Buildings and Structures in the various districts and to regulate Setbacks and other open areas Abutting and between Buildings and Structures and to regulate the density of development, the County hereby is divided into the following zones:

a. ~~General, Agricultural, and Rural~~ Residential Zones

1.	**G**	**General Zone**
2.	**AR**	**Agricultural Residential Zone**
3.	**RR**	**Rural Residential Zone**

b. ~~Residential Zones~~

1.	**RS-6,000**	**Residential Single Family Zone**
2.	**RS-10,000**	**Residential Single Family Zone**
3.	**RS-18,000**	**Residential Single Family Zone**
4.	**RS-36,000**	**Residential Single Family Zone**
5.	**RM-10/A**	**Residential Multiple Family Zone**
6.	**RM-20/A**	**Residential Multiple Family Zone**
7.	**RMH**	**Residential and Manufactured Home Zone**
8.	**MHP**	**Manufactured Home Park Zone**
9.	**PRD**	**Planned Residential Development**

c. Commercial Zones

1.	**CN-2/A**	**Commercial Neighborhood Zone**
2.	**CG-10,000**	**Commercial General Zone**
3.	**CH-10,000**	**Commercial Heavy Zone**
4.	**RC**	**Resort Commercial Zone**

d. Industrial Zones

1.	**MP-20,000**	**Industrial Park Zone**
2.	**M-1-10,000**	**Light Industrial Zone**
3.	**M-2-6,000**	**Heavy Industrial Zone**

e. Special Purpose Zones

1.	**PC**	**Planned Community Zone**
2.	**PS**	**Public and Semi-Public Zone**
3.	**OS**	**Open Space and Conservation Zone**

4. **P** **Parking Zone**
5. **MR** **Mineral Resource Zone**

f. Overlay Zones

1. **FPM** **Floodplain Management Overlay Zone**
2. **DRO** **Design Review Overlay Zone**

Section 1.4.B: Adoption of Zones - Maps

Said several zones and boundaries of said zones and each of them hereby are established and adopted as shown, delineated and designated on the "Official Zoning Maps" of the County of Coconino, Arizona, which maps, together with all notations, references, data, Zone boundaries and other information thereon, is made a part hereof and adopted concurrently herewith.

Section 1.4.C: Filing

The originals of the Official Zoning Maps shall be kept on file with the Department of Community Development and shall constitute the original record.

Section 1.5: Effects of Zoning

Section 1.5.A: Application of Provisions

The provisions of this Ordinance governing the Use of land, Buildings and Structures, Setbacks Abutting Buildings and Structures, the height and bulk of Buildings, the density of development, the number of Dwelling units per acre, standards of performance and other provisions hereby are declared to be in effect upon all land included with the boundaries of each and every Zone established by this Ordinance. Any violation of the performance standards listed in this ordinance is a nuisance per se.

Section 1.5.B: Buildings under Construction

Any Building or Structure for which a Building Permit has been issued and which is still valid under the provisions of earlier ordinances of the County which are in conflict with this Ordinance nevertheless may be continued and completed in accordance with the plans and specifications upon which the permit was issued.

Section 1.6: Severability

If any section, subsection, subdivision, sentence, clause, phrase, or portion of this Ordinance, or the application thereof to any person or place, is for any reason held to be invalid or unconstitutional by the decision of any court of competent jurisdiction, such decision shall not

affect the validity of the remaining portions of this Ordinance or its application to other persons or places. The Board of Supervisors hereby declares that it would have adopted this Ordinance, and each section, subsection, subdivision, sentence, clause, phrase, or portion thereof, irrespective of the fact that any one or more sections, subsections, subdivisions, sentences, clauses, phrases, or portions, or the application thereof to any person or place, be declared invalid or unconstitutional.

Section 1.7: Statutory Exemptions

Section 1.7.A: Railroad, Mining, Metallurgical, Grazing or General Agriculture

1. Pursuant to A.R.S. § 11-812(A)(2) and (3) nothing contained in this Ordinance shall prevent, restrict or otherwise regulate the Use or occupation of land or improvements for railroad, mining, metallurgical, grazing or general Agricultural purposes including Agricultural Composting, if the parcel concerned is five or more contiguous Commercial Acres (35,000 square feet) in size.
2. Property is not considered exempt from this Ordinance unless and until the Coconino County Community Development Department issues a Certificate of Exemption for that property. Only property eligible for agricultural classification for tax purposes by the Arizona Department of Revenue, based on criteria established in the Department of Revenue Agricultural Manual, is eligible for grazing or general Agricultural exemptions. The Community Development Director may determine that all or part of the property is not used primarily for one or more of the purposes enumerated above.
3. In order to secure a Certificate of Exemption, an application must be submitted on the form prescribed by the Community Development Department. The application must be accompanied by the following: evidence of agricultural classification by the Coconino County Assessor's Office or the Arizona Department of Revenue, a Site Plan, grazing leases, if any, and other documentation indicating the use of the property for Exempt Agricultural Use as may be required by the Director of the Community Development Department. The Community Development Department will review the application for administrative completeness within 10 days after submission. The Department will have 30 days after administrative completeness to conduct its substantive review of the application. The total time for the granting or denying of the Certificate of Exemption is 40 days. Time frames are tolled and may be waived in accordance with A.R.S. §11-1601 et seq.
4. Exempt status is open to review by the Coconino County Community Development Department and may be canceled at any time upon a determination by the Director that the property is no longer being used for an exempt purpose. Any Structures built under an exemption that does not meet the underlying Zoning district may be required to comply with said standards if, at a future date, the exemption is no longer applicable. The denial of a Certificate of Exemption may be appealed to the Board of Supervisors subject the provisions of Section 30.7 of this Ordinance.

Section 1.7.B: Agricultural Composting

1. Pursuant to A.R.S. § 11-812 nothing contained in this Ordinance shall prevent, restrict or otherwise regulate the Use or occupation of land or improvements for Agricultural Composting, if the tract is five or more contiguous Commercial Acres. An Agricultural Composting operation shall notify in writing the Board of Supervisors and the nearest fire department of the location of the composting operation. If the nearest fire department is located in a city, town or fire district where the Agricultural Composting is not located, the Agricultural Composting operation shall also notify in writing the fire district in which the operation is located.

Section 1.7.C: Sale of food by Producers

Pursuant to A.R.S. § 3-561 to 3-563 nothing contained in this Ordinance shall prevent or restrict a producer of food from selling products raised or grown on the same property.

Section 1.8: Fees

All applications for permits in relation to this Ordinance shall be accompanied by a fee established by resolution of the Board of Supervisors.

Section 1.9: Computation of Time

Deadlines are calculated according to the Arizona Rules of Civil Procedure. (All deadlines of 10 days or less are based upon business days, 11 or more are calendar days. The first day is not counted, but the last day is counted.)

Section 1.10: Relationship to other policies and regulations

Section 1.10.A: Other Plans and Ordinances

The Coconino County Comprehensive Plan is the overarching policy document for land-use decisions within the County. Area plans for communities within the County have been adopted as amendments to the Comprehensive Plan and provide more specific policies for each area. The Zoning and Subdivision Ordinances are used to implement the Comprehensive Plan and its amendments. The adopted Building Code sets the minimum standards for all construction within the County.

Section 1.10.B: Statutory Changes

The statutory citations are those in effect on the date of adoption of this Ordinance amendment. All subsequent amendments to the Arizona Revised Statutes shall be incorporated.

Section 1.11: Permit Requirements

Section 1.11.A: Zoning Compliance Review

Zoning compliance review is completed in conjunction with each of the following permits:

a. Building Permits

1. A Building Permit, as required by the Building Code, shall be obtained prior to the construction, reconstruction, alteration, relocation or change in use of any Building or other Structure.

b. Floodplain Permits

1. A Floodplain Permit, as required by this Ordinance, shall be obtained prior to the construction, reconstruction, alteration, relocation or change in use of any Building or other Structure.

c. Other Permits

1. All other permits, as required by this Ordinance, including but not limited to Sign Permits, Lighting Permits, Conditional Use Permits and Temporary Use Permits shall be obtained prior to the installation, construction, reconstruction, alteration, relocation, or initiation of the permitted feature.

Section 1.11.B: Permit Applicants

All applications for permits must be signed by the owner of the property that the permit pertains to. If there are several persons or entities with land-based interests in the property such as tenants, easement-holders or holders of a mortgage or note, the Community Development Director, in his or her sole discretion, determines which land-interest holders must sign the permit application. The applicant shall be the proponent of the project or the property owner, but must be the party responsible for meeting the conditions of the permit.

Section 1.12: -15 Reserved for future amendments

CHAPTER 2. ZONING DISTRICTS

Residential Zones

2.1	G	General Zone
2.2	AR	Agricultural Residential Zone
2.3	RR	Rural Residential Zone
2.4	RS-	Single Family Residential Zones
2.8	RM-10/A	Residential Multiple Family Zone
2.9	RM-20/A	Residential Multiple Family Zone
2.24	RMH	Residential and Manufactured Home Zone
	MHP	Manufactured Home Park
2.17	PRD	Planned Residential Development

Commercial Zones

2.10	CN-2/A	Commercial Neighborhood Zone
2.11	CG-10,000	Commercial General Zone
2.12	CH-10,000	Commercial Heavy Zone

Industrial Zones

2.13	MP-20,000	Industrial Park Zone
2.14	M-1-10,000	Light Industrial Zone
2.15	M-2-6,000	Heavy Industrial Zone
2.21	RC	Resort Commercial Zone

Special Purpose Zones

2.18	PC	Planned Community Zone
2.19	PS	Public and Semi-Public Zone
2.20	OS	Open Space and Conservation Zone
2.22	P	Parking Zone
2.23	MR	Mineral Resource Zone

Overlay Zones

2.25	FPM	Floodplain Management Overlay Zone
2.26	DRO	Design Review Overlay Zone

Residential Zones

Section 2.1: General, Agricultural Residential and Rural Residential Zones

Section 2.1.A: Purposes

1. In addition to the objectives outlined in Section 1.1: Purpose and Scope, the General, Agricultural Residential, and Rural Residential Zones are included in the zoning regulations to achieve the following purposes:
    a. To provide zone classifications for all unincorporated remote areas of the County not committed to any specific urban Use.
    b. To reserve areas of the County for light agricultural pursuits in conjunction with very low-density residential Uses and thereby to encourage and promote rural living.
    c. To provide space for people, minimize traffic congestion and preserve the existing rural environment of the County.
2. **G - General Zone**

    This zone is a general rural land-use category intended for application to those unincorporated areas of the County not specifically designated in any other zone classification. Only those Uses are permitted which are complementary and compatible with a rural environment.
3. **AR - Agricultural Residential Zone**
    a. This zone is intended to designate areas of the County for low-density residential Use on minimum Lot sizes of one (1) acre where those light agricultural activities can be conducted which are related to rural family living and pursuits.
4. **RR - Rural Residential Zone**
    a. This zone is intended to designate areas of the County for low-density residential Use on minimum Lot sizes of one (1) acre where those light agricultural activities can be conducted which are related to rural family living and pursuits. The zone is similar to AR but prohibits Mobile and Manufactured Homes.

Section 2.1.B: Permitted and Conditional Uses: G, AR, and RR Zones

The following Uses shall be permitted where the symbol “P” appears and shall be permitted Uses subject to a Conditional Use permit where the symbol “C” appears in the column beneath each zone designation. All Uses not listed are prohibited. For Uses similar to those listed, see Section 30.1.

Residential Uses		G	AR	RR
Establishment of Residential Uses shall require applicable Building and Environmental Quality Permits, permanent wastewater systems, and connection to appropriate utilities.				
1.	Bed and Breakfast establishments subject to the provisions of Section 24.4	C	C	C
2.	Group Homes for the Handicapped subject to the provisions of Section 24.6	P	P	P
3.	Institutional Residential and Other Group Homes	C	C	C
4.	Manufactured Home	P	P	-
5.	Mobile Home subject to the provisions of Section 18.4.A.5	P	P	-
6.	Single Family Dwelling or Modular Home	P	P	P
7.	Travel Trailer or Park Model (8' x 32' minimum size)	C	C	-
8.	**Vacation Rental subject to the provisions of Section**	**P**	**P**	**P**

Agricultural and Related Uses		G	AR	RR
9.	Agriculture ~~and Gardening~~ **Animal Keeping subject to the provisions of Section 24**~~.~~	~~P~~	~~P~~	~~P~~
10.	**Agritourism**	**C**	**C**	**-**
11.	Animal shelters, Animal Hospitals and Veterinary Facilities	C	C	C
12.	Aviaries and apiaries	P	P	P
13.	Commercial Fertilizer Operation	C	C	C
14.	Feedlot	C	-	-
15.	Feed store	C	C	C
16.	Meat Processing Facilities, Game	C	C	C
17.	Meat Processing Facilities, Small	C	-	-
18.	Riding academies or riding clubs	C	C	C

Public and Semi-Public Uses		G	AR	RR
Public and Semi-Public Uses shall maintain a minimum Setback of 50 feet from all property lines. Interior Side and Rear Setbacks may be used for off-street parking, Landscaping, and recreational purposes. Where public or semi-public Uses are established, a masonry wall or alternative rigid, opaque fence, six feet in height as measured from the highest adjacent Grade and screen Landscaping may be required by the Planning and Zoning Commission to be erected and maintained between such Uses and adjacent residential properties.				
19.	Airports, landing fields, heliports and related activities and Uses	C	C	C
20.	Cemeteries, human and animal	C	C	C

Public and Semi-Public Uses		G	AR	RR
Public and Semi-Public Uses shall maintain a minimum Setback of 50 feet from all property lines. Interior Side and Rear Setbacks may be used for off-street parking, Landscaping, and recreational purposes. Where public or semi-public Uses are established, a masonry wall or alternative rigid, opaque fence, six feet in height as measured from the highest adjacent Grade and screen Landscaping may be required by the Planning and Zoning Commission to be erected and maintained between such Uses and adjacent residential properties.				
21.	Churches, convents, monasteries and other religious institutions	C	C	C
22.	Community Service Agency Camps	C	C	C
23.	Day Care Center	P	P	P
24.	Educational Institutions, public or private	C	C	C
25.	Fire Stations	C	C	C
26.	Hospitals	C	C	C
27.	Landfill operations	C	C	-
28.	Libraries and museums, public or private	C	C	C
29.	Off-Highway Vehicle Facilities	C	-	-
30.	Pre-school	C	C	C
31.	Public parks and Recreational Facilities	C	C	C
32.	Recreational Facilities such as rodeos, hunting/riding clubs, Community Centers, country clubs, tennis and aquatic facilities, golf courses, with incidental limited commercial uses which are commonly associated and directly related to the primary use	C	C	C

Other Uses		G	AR	RR
Uses shall maintain a minimum Setback of 50 feet from all property lines. Interior Side and Rear Setbacks may be used for off-street parking, Landscaping, and recreational purposes.				
33.	Borrow Pits	C	C	-
34.	Firewood storage and sales yards	C	C	-
35.	Meteorological (MET) Tower	C	C	C
36.	Mineral extraction operations, Non-exempt	C	C	-
37.	Parking or storage of no more than two (2) Commercial Vehicles and/or Commercial Equipment	C	C	C
38.	Soil and aggregate material storage	C	C	-
39.	Soil and water resource conservation projects	P	P	P

Other Uses		G	AR	RR
Uses shall maintain a minimum Setback of 50 feet from all property lines. Interior Side and Rear Setbacks may be used for off-street parking, Landscaping, and recreational purposes.				
40.	Utility Installations and public service sub-stations, reservoirs, pumping plants, and similar installations, not including public utility offices	C	C	C
41.	Wireless Telecommunications Facilities subject to the provisions of Section 24.6	C	C	C
42.	Wood Processing & Lumber mills	C	-	-

Home Occupations		G	AR	RR
43.	Cottage Industries subject to the provisions of Section 24.3	C	C	C
44.	Home Occupations subject to the provisions of Section 24.2	P	P	P

Accessory Uses		G	AR	RR
45.	Accessory Structures on the same site as a permitted Use	P	P	P
46.	Accessory Structures in excess of 3,000 square feet	C	C	C
47.	Accessory Uses and Structures on the same site as a conditional use	C	C	C
48.	Accessory Wind Energy Systems subject to the provisions of Section 24.9	P	P	P
49.	Apparatus needed for the operation of active and passive solar energy systems or other alternate energy systems, including but not limited to, overhangs, movable insulating walls and roofs, attached or detached solar collectors, reflectors and piping shall be permitted for any Use subject to the applicable provisions of the Zone.	P	P	P
50.	Accessory Dwellings subject to the provisions of Section 24	P	P	P
51.	Metal Storage Containers as prescribed in Section 24.8	P	P	P

Temporary Uses		G	AR	RR
52.	Temporary Uses as prescribed in Section 24.1	P	P	P
53.	One Recreational Vehicle or Travel Trailer per Lot or parcel may be used for temporary residency not to exceed 100 days per year subject to the Provisions of Section 24.1	P	P	P
54.	Storage of one (1) unoccupied Mobile or Manufactured home per Lot or parcel for a period not to exceed sixty (60) days through the issuance of a Temporary Use Permit.	P	P	-
55.	Model homes and subdivision sales offices	C	C	C

Section 2.1.C: ~~Special Uses:~~ Interstate Highway Interchanges G, AR, and RR Zones

1. For properties with parcel boundaries within 500 feet of an Interstate highway interchange Right-of-Way the following Uses shall be permitted subject to the granting of a conditional use permit:
    a. Automobile Service Stations
    b. Convenience Markets
    c. Hotels/Motels
    d. Recreational Vehicle and Travel Trailer parks
    e. Restaurants
    f. Truck Stops
2. Uses shall maintain a minimum Setback of 50 feet from all property lines. Interior Side and Rear Setbacks may be used for off-street parking, Landscaping, and recreational purposes.

Section 2.1.D: Property Development Standards: G, AR, and RR Zones

The following property development standards shall apply to all land and Structures, permitted in their respective zones, except that any Lot shown on an official subdivision map that was duly approved and recorded, or any Lot for which a bona fide deed was duly recorded in conformance with the zoning in effect prior to the date of adoption of this ordinance may be used as a Building site.

a. The following requirements are minimum unless otherwise noted:

	Property Development Standards	G	AR	RR
1.	Dwelling unit per parcel, maximum, except for permitted accessory units	1	1	1
2.	Minimum parcel size, net area in acres (or subject to the provisions of Section 18.3.A.1)	10	1	1
3.	Lot Width, in feet	300	100	100
4.	Lot Depth, in feet	300	150	150
5.	Front Setback, in feet	30	25	25
6.	Side Interior Setback, in feet	20	10	10
7.	Side Street Side Setback, in feet	30	15	15
8.	Rear Setback, in feet	30	20	20
9.	Lot Coverage, maximum	30%	35%	35%
10.	Structure Height, maximum, in feet	40	35	35
11.	Off-street parking spaces per Dwelling Unit	1	1	1
12.	Distance between Structures, in feet	10	10	10

b. All Setbacks shall be measured from property lines. In situations where an Access Easement is located along a property line, the Setback shall be measured

from the interior edge of the Access Easement line. Where an Access Easement bisects any parcel of land, said Easement shall be considered a Street for Setback purposes and Street Side Setbacks shall apply.

c. In the AR and RR Zone, the minimum Lot size shall be one (1) acre. However, larger minimum Lot sizes may be specified and designated on the Official Zoning Map by attaching a number designation following the zone classification: such number shall be in increments of one-half (½) acre. For example, AR-2 means Agricultural Residential -- 2 acre minimum Lot size; AR-2 ½ means Agricultural Residential -- 2 ½ acre minimum Lot size; etc.

d. For Access purposes each parcel shall have a minimum 30 foot wide Access Easement or Right-of-Way. A turnaround with a minimum radius of 25 feet shall be provided at the end of each Access road over 150 feet in length. No fences or other obstructions shall be placed in the Access Easement area except with written permission of all other property owners served by the Easement. For any parcel of land created after January 3, 1995, an Access road to the parcel must be provided prior to the delivery of any combustible building materials. Said Access road must be constructed to applicable County private road standards.

Section 2.1.E: Performance Standards: G, AR, and RR Zones

1. **Parking**

   a. Parking shall be provided per the requirements of the Use of the property.

   b. Required Front and Street Side Setbacks shall not be used for parking or storage of any motor vehicles or vehicle accessory such as camper shells, trailers, motor bikes, or other wheeled accessory or convenience, except that licensed and operable vehicles may be parked upon the driveway or Access way to the garage or carport.

      1. One motor vehicle or Travel Trailer for sale may be parked on or adjacent to the driveway but not elsewhere in the Front or Street Side Setbacks.

      2. Licensed and operable motor vehicles or vehicle accessories with signage may not be parked or stored within the required Front and Street Side Setbacks, except for overnight parking within a driveway or Access way to the garage or carport. Vehicles and accessories with signage may not be set up on site in such a way as to advertise a Use, product or activity.

2. **Landscaping**

   All required Landscaping shall be permanently maintained in a neat and orderly condition.

3. **Lighting**

   No outdoor lighting shall be permitted in G, AR, and RR Zones except as provided in Section

4. Signs:

No Sign or outdoor Advertising Device shall be permitted in the G, AR and RR Zones except as provided in Section 26: Signs.

5. **Projections into Required Yards**

   Required Yards and separations shall be maintained free of above ground Structures except as provided in Section

6. <u>Accessory Structures: G, AR, and RR Zones</u>

   a. In the General, Agricultural Residential, and Rural Residential Zones all Accessory Structures (excluding Guest Houses/Accessory Living Quarters) shall be subject to the following restrictions:

      1. Bathroom facilities shall be limited to one (1) sink and one (1) toilet.
      2. No kitchen facilities or wet bars shall be permitted.
      3. The use of Mobile Homes, semi-trailers, railroad cars, Travel Trailers, camper shells or similar units as Accessory Structures is prohibited. Metal Storage Containers may be permitted, refer to Section 24.7.
      4. Accessory Structures may be established prior to the Dwelling Unit or primary Structure subject to the provisions outlined above.

7. **Other Performance Standards**

   a. Commercial Vehicles exceeding 26,000 lbs. gross vehicle weight (GVW), including but not limited to semi tractors, semi-trailers, dump trucks, and Commercial Equipment shall not be parked, stored, or serviced on any Lot or parcel of land except as provided in Section 18.1.D. Vehicles used for Exempt Agricultural purposes that are stored or parked on a parcel for which the owner has a Certificate of Agricultural Exemption are exempt from this Section.

   b. The storage of a Mobile or Manufactured Home on any Lot or parcel of land, is prohibited except as prescribed in Section 18.3-A.7.

SECTION 2.2: SINGLE FAMILY RESIDENTIAL ZONES

Section 2.2.A: Purposes

In addition to the objectives outlined in Section 1.1: Purpose and Scope, the Residential Zones are included in the zoning regulations to achieve the following purposes:

a. To reserve appropriately located areas for family living at a broad range of Dwelling Unit densities consistent with the Comprehensive Plan and with sound standards of public health, safety and welfare.

b. To ensure adequate light, air, privacy, and open space for each Dwelling.

c. To minimize traffic congestion and to avoid the overloading of utilities by preventing the construction of Buildings of excessive number in relation to the land area around them.

d. To protect residential properties from noise, direct illumination, unsightliness, odors, smoke and other objectionable influences.

e. To facilitate the provision of utility services and other public facilities commensurate with anticipated population, Dwelling Unit densities, and service requirements.

1. **RS-6,000 - Residential Single Family Zone**

   This zone is intended for single family, urban residential development on minimum Lot sizes of 6,000 square feet and maximum densities of 6.0 Dwelling Units per acre. Only those additional Uses are permitted that are complimentary to, and can exist in harmony with, a residential neighborhood.

2. **RS-10,000 - Residential Single Family Zone**

   This zone is intended for low-urban density single family residential development on minimum Lot sizes of 10,000 square feet and maximum densities of 4.0 Dwelling Units per acre. Only those additional Uses are permitted that are complimentary to, and can exist in harmony with, a residential neighborhood.

3. **RS-18,000 - Residential Single Family Zone**

   This zone is intended for low density single family residential development on minimum Lot sizes of 18,000 square feet and at maximum densities of 2.0 Dwelling Units per acre. Only those additional Uses are permitted that are complimentary to, and can exist in harmony with, a suburban residential neighborhood.

4. **RS-36,000 - Residential Single Family Zone**

   This zone is intended for very low density single family residential development on minimum Lot sizes of 36,000 square feet and at maximum densities of 1.0 Dwelling Units per acre. Only those additional Uses are permitted that are complimentary to, and can exist in harmony with, a suburban residential neighborhood.

Section 2.2.B: Permitted and Conditional Uses: RS Zones

The following Uses shall be permitted where the symbol "P" appears and shall be permitted Uses subject to a Conditional Use permit where the symbol "C" appears in the column beneath each zone designation. All Uses not listed are prohibited. For Uses similar to those listed, see Section 30.1.

Residential Uses		RS-6,000	RS-10,000	RS-18,000	RS-36,000
Establishment of Residential Uses shall require applicable Building and Environmental Quality Permits					
1.	Bed and Breakfast Establishments subject to the provisions of Section 24.4	-	-	-	C
2.	Group Homes for the Handicapped, subject to the provisions of 24.6	P	P	P	P
3.	Institutional Residential and Other Group Homes	C	C	C	C
4.	Single Family Dwelling or Modular home	P	P	P	P
5.	**Vacation Rental subject to the provisions of Section**	**P**	**P**	**P**	**P**

Agricultural and Related Uses		RS-6,000	RS-10,000	RS-18,000	RS-36,000
6.	Agriculture and ~~Gardening~~ **Animal Keeping subject to the provisions of Section 24**	P	P	P	P
7.	Riding academies or riding clubs	-	-	C	C

Public and Semi-Public Uses		RS-6,000	RS-10,000	RS-18,000	RS-36,000
8.	Churches, convents, monasteries and other religious institutions	C	C	C	C
9.	Day Care Center	P	P	P	P
10.	Educational Institutions, public or private	C	C	C	C
11.	Fire Stations	C	C	C	C
12.	Hospitals	C	C	C	C
13.	Libraries and museums, public or private	C	C	C	C
14.	Pre-schools	C	C	C	C
15.	Public parks and Recreational Facilities	C	C	C	C

16.	Recreational Facilities such as rodeos, hunting/riding clubs, Community Centers, country clubs, tennis and aquatic facilities, golf courses, with incidental, limited commercial uses which are commonly associated with and directly related to the primary use	C	C	C	C
17.	Utility Installations and public service sub-stations, reservoirs, pumping plants, and similar installations, not including public utility offices	C	C	C	C

Where public or semi-public Uses are established, a masonry wall or solid wood fence six feet in height as measured from the highest adjacent Grade and screen Landscaping shall be erected and maintained between such Uses and adjacent residential Uses on properties.

~~In any residential zone,~~ Structures permitted under 19.1.I.C and 19.1.II.C for public or semi-public Uses shall maintain a minimum Setback of 50 feet from any property line. Interior Side and Rear Setbacks may be used for off-street parking, landscaping, and recreational purposes.

Home Occupations		RS-6,000	RS-10,000	RS-18,000	RS-36,000
18.	Cottage Industries subject to the provisions of Section 24.3.	-	-	-	C
19.	Home Occupations subject to the provisions of Section 24.2	P	P	P	P

Accessory Uses		RS-6,000	RS-10,000	RS-18,000	RS-36,000
20.	Accessory Structures located on the same site as a permitted use	P	P	P	P
21.	Accessory Structures in excess of 3,000 square feet	C	C	C	C
22.	Accessory Uses and Structures located on the same site as a conditional use	C	C	C	C
23.	Accessory Wind Energy Systems subject to the provisions of Section 24.9	P	P	P	P
24.	**Accessory Dwellings subject to the provisions of Section 24**	~~P~~	~~P~~	~~P~~	~~P~~
25.	Metal Storage Containers as prescribed in Section 24.8	P	P	P	P

Accessory Uses		RS-6,000	RS-10,000	RS-18,000	RS-36,000
26.	Apparatus needed for the operation of active or passive solar energy systems or other alternate energy systems, including but not limited to, overhangs, movable insulating walls and roofs, attached or detached solar collectors, reflectors and piping ~~shall be permitted for any Use subject to the applicable provisions of the Zone.~~	P	P	P	P

Temporary Uses		RS-6,000	RS-10,000	RS-18,000	RS-36,000
27.	Temporary uses as prescribed in Section 24.1	P	P	P	P
28.	Model homes and subdivision sales offices	C	C	C	C

Section 2.2.C: Property Development Standards: RS Zones

1. The following property development standards shall apply to all land and Structures, permitted in their respective residential zones, except that, any Lot shown on an official subdivision map that was duly approved and recorded; or any Lot for which a bona fide deed was duly recorded in conformance with the zoning in effect prior to the date of adoption of this Ordinance, may be used as a Building site.
2. RESIDENTIAL SINGLE FAMILY ZONES: The following requirements are minimum unless otherwise noted:

Property Development Standards		RS-6,000	RS-10,000	RS-18,000	RS-36,000
1.	Density, maximum Dwelling Units per acre	6.0	4.0	2.0	1.0
2.	Dwelling Unit per parcel, maximum except for permitted accessory units	1	1	1	1
3.	Minimum parcel size net area in square feet (or subject to the provisions of Section 19.2.A.1)	6,000	10,000	18,000	36,000
4.	Lot Width, in feet	60	80	100	120
5.	Lot Depth, in feet	100	100	100	150
6.	Front Setback, in feet	20	20	25	25
7.	Side Interior Setback, in feet	5	10	10	20
8.	Side Street Side Setback, in feet	10	10	15	20
9.	Rear Setback, in feet	20	20	25	25
10.	Lot Coverage, maximum	40%	40%	35%	35%
11.	Structure Height, maximum in feet	35	35	35	35
12.	Off-street parking spaces per Dwelling Unit	2	2	2	2
13.	Distance between Structures, in feet	10	10	10	10

3. All Setbacks shall be measured from property lines. In situations where an Access Easement is located along a property line, the Setback shall be measured from the interior edge of the Access Easement line. Where an Access Easement bisects any parcel of land, said Easement shall be considered a Street for Setback purposes and Street Side Setbacks shall apply.
4. In the RS Zone, other Lot sizes larger than 6,000 square feet may be specified and designated on the Official Zoning Map by attaching a number designation following the zone classification. For example, RS-15,000, RS-40,000, or RS-5 (5 acre minimum lot size). Permitted and conditional uses, property development standards, performance standards and all other requirements and regulations for these alternate zone classifications with the exception of the minimum parcel size, shall be the same as those specified in this Ordinance for the zoning classification with the next lower minimum parcel size, e.g. RS-15,000 would have RS-10,000 requirements and RS-40,000 and RS-5 would have RS-36,000 requirements.
5. For Access purposes each parcel shall have a minimum 30 foot wide Access Easement or Right-of-Way. A turnaround with a minimum radius of 25 feet shall be provided at the end of each Access road over 150 feet in length. No fences or other obstructions shall be placed in the Access Easement area except with written permission of all other property owners served by the Easement. For any parcel of land created after January 3, 1995, an Access road to the parcel must be provided prior to the delivery of any combustible Building materials. Said Access road must be constructed to applicable County private road standards.

Section 2.2.D: Performance Standards: RS Zones

1. **Parking**

   a. **Parking shall be provided per the requirements of the Use of the property.**

   b. Required Front and Street Side Setbacks shall not be used for parking or storage of any motor vehicle or vehicle accessory such as camper shells, trailers, motor bikes, or other wheeled accessory or convenience, except that operable motor vehicles may be parked upon the driveway or Access way to the Garage or Carport.

   c. One motor vehicle or Travel Trailer for sale may be parked on or adjacent to the driveway but not elsewhere in the Front or Street Side Yard Setbacks.

   d. Licensed and operable motor vehicles or vehicle accessories with signage may not be parked or stored within the required Front and Street Side Setbacks, except for overnight parking within a driveway or Access way to the garage or carport. Vehicles and accessories with signage may not be set up on site in such a way as to advertise a Use, product or activity.

   e. Commercial Vehicles exceeding 26,000 lbs.gross vehicle weight (gvw) and associated Commercial Equipment shall not be parked, stored, or serviced in any residential zone.

2. **Landscaping**

   In all residential zones, required Front and Street Side Setbacks shall be landscaped except for necessary walks, drives and fences. All required Landscaping shall be permanently maintained in a neat and orderly condition.

3. **Lighting**

   No outdoor lighting shall be permitted in the RS Zones except as provided in Section

4. Signs: R**S** Zones

   No Sign or outdoor Advertising Device Structure shall be permitted in any R Zone except as provided in Section 26: Signs.

5. **Projections into required Yards**

   Required Yards and separations shall be maintained free of above ground Structures except as provided in Section

6. Accessory Structures: R**S** Zones

   Accessory Structures (excluding Guest Houses/Accessory Living Quarters) shall be subject to the following restrictions:

   1. Bathroom facilities shall be limited to one (1) sink and one (1) toilet.
   2. No kitchen facilities or wet bars shall be permitted.
   3. The use of Mobile, Manufactured or Modular Homes, semi-trailers, railroad cars, Travel Trailers, camper shells or similar units as Accessory Structures is prohibited.
   4. Accessory Structures may not be established prior to the Dwelling Unit or primary Structure except in the RS Zones with minimum Lot sizes of 1 acre or more.

7. **Other Performance Standards**

   a. Use of a tent, Travel Trailer, Recreational Vehicle or Park Model as a temporary or permanent residence is prohibited.

   b. In all residential zones, air conditioners, heating, cooling, ventilating equipment, swimming pool pumps and heaters and all other mechanical devices shall be screened from surrounding properties and streets and shall be so operated that they do not disturb the peace, quiet, and comfort of neighboring residents. Facilities for the operation of alternate energy systems shall be exempted from the screening requirements when such screening will clearly restrict the efficient operation of such systems.

Section 2.3.A: Purposes

In addition to the objectives outlined in Section 1.1: Purpose and Scope, the Residential Zones are included in the zoning regulations to achieve the following purposes:

a. To reserve appropriately located areas for family living at a broad range of Dwelling Unit densities consistent with the Comprehensive Plan and with sound standards of public health, safety and welfare.

b. To ensure adequate light, air, privacy, and open space for each Dwelling.

c. To minimize traffic congestion and to avoid the overloading of utilities by preventing the construction of Buildings of excessive number in relation to the land area around them.

d. To protect residential properties from noise, direct illumination, unsightliness, odors, smoke and other objectionable influences.

e. To facilitate the provision of utility services and other public facilities commensurate with anticipated population, Dwelling Unit densities, and service requirements.

1. **RM-10/A - Multiple Family Residential Zone**

   This zone is intended for the development of medium density Apartments, Condominiums, Townhouses or other group Dwellings with provisions for adequate light, air, open space and landscaped areas at maximum densities of 10.0 Dwelling Units per acre. Only those additional Uses are permitted that are complementary to, and can exist in harmony with, such residential developments.

2. **RM-20/A - Multiple Family Residential Zone**

   This zone is intended for the development of high density Apartments, Condominiums, Townhouses or other group Dwellings with provisions for adequate light, air, open space and landscaped areas at maximum densities of 20.0 Dwelling Units per acre. Only those additional Uses are permitted that are complementary to, and can exist in harmony with, such residential developments.

Section 2.3.B: Permitted and Conditional Uses: RM Zones

The following Uses shall be permitted where the symbol “P” appears and shall be permitted Uses subject to a Conditional Use permit where the symbol “C” appears in the column beneath each zone designation. All Uses not listed are prohibited. For Uses similar to those listed, see Section 30.1.

Residential Uses		RM-10/A	RM-20/A
Establishment of Residential Uses shall require applicable Building and Environmental Quality Permits			
1.	Apartments containing not more than 4 units	P	P
2.	Apartments containing 5 or more units	C	C
3.	Bed and Breakfast Establishments subject to the provisions of Section 24.4	C	C
4.	Condominiums and Condominium conversions	C	C
5.	Dormitories	C	C
6.	Group Homes For The Handicapped, subject to the provisions of Section 24.6	P	P
7.	Guest Dwellings	P	P
8.	Institutional Residential and Other Group Homes	C	C
9.	Single Family Dwelling or Modular Home	P	P
10.	**Vacation Rental subject to the provisions of Section**	**P**	**P**

Agricultural and Related Uses		RM-10/A	RM-20/A
11.	**Agriculture** and ~~Gardening~~ **Animal Keeping subject to the provisions of Section**	P	P

Public and Semi-Public Uses		RM-10/A	RM-20/A
Where public or semi-public Uses are established, a masonry wall or solid wood fence six feet in height as measured from the highest adjacent Grade and screen Landscaping shall be erected and maintained between such Uses and adjacent residential Uses on properties. In any residential zone, Structures permitted under 19.1.I.C and 19.1.II.C for public or semi-public Uses shall maintain a minimum Setback of 50 feet from any property line. Interior Side and Rear Setbacks may be used for off-street parking, landscaping, and recreational purposes.			
12.	Churches, convents, monasteries and other religious institutions	C	C
13.	Day Care Center	P	P
14.	Educational Institutions, public or private	C	C
15.	Fire Stations	C	C
16.	Hospitals	C	C
17.	Libraries and museums, public or private	C	C
18.	Pre-school	C	C
19.	Public parks and Recreational Facilities	C	C

Public and Semi-Public Uses		RM-10/A	RM-20/A
Where public or semi-public Uses are established, a masonry wall or solid wood fence six feet in height as measured from the highest adjacent Grade and screen Landscaping shall be erected and maintained between such Uses and adjacent residential Uses on properties. In any residential zone, Structures permitted under 19.1.I.C and 19.1.II.C for public or semi-public Uses shall maintain a minimum Setback of 50 feet from any property line. Interior Side and Rear Setbacks may be used for off-street parking, landscaping, and recreational purposes.			
20.	Recreational Facilities such as rodeos, hunting/riding clubs, Community Centers, country clubs, tennis and aquatic centers golf courses, with incidental, limited commercial uses which are commonly associated with and directly related to the primary use	C	C
21.	Utility Installations and public service sub-stations, reservoirs, pumping plants and similar installations, not including public utility offices	C	C

1.

Home Occupations		RM-10/A	RM-20/A
22.	Home Occupations, subject to the provisions of Section 24.2	P	P

Accessory Uses		RM-10/A	RM-20/A
23.	Accessory solar and geothermal systems	P	P
24.	Accessory Structures located on the same site as a permitted use	P	P
25.	Accessory Structures in excess of 3000 square feet	C	C
26.	Accessory Uses and Structures located on the same site as a conditional use	C	C
27.	Accessory Wind Energy Systems subject to the provisions of Section 24.9	P	P
28.	Apparatus needed for the operation of active or passive solar energy systems or other alternate energy systems, including but not limited to, overhangs, movable insulating walls and roofs, attached or detached solar collectors, reflectors and piping ~~shall be permitted for any Use subject to the applicable provisions of the Zone.~~	P	P

Temporary Uses		RM-10/A	RM-20/A
29.	Temporary uses as prescribed in Section 24.1	P	P
30.	Model homes and subdivision sales or rental offices	C	C

Section 2.3.C: Property Development Standards: RM Zones

1. The following property development standards shall apply to all land and Structures, permitted in their respective residential zones, except that, any Lot shown on an official subdivision map that was duly approved and recorded; or any Lot for which a bona fide deed was duly recorded in conformance with the zoning in effect prior to the date of adoption of this Ordinance, may be used as a Building site.
2. RESIDENTIAL MULTIPLE FAMILY ZONES: The following requirements are minimum unless otherwise noted:

Property Development Standards		RM-10/A	RM-20/A
1.	Density, maximum Dwelling Units per acre	10	20
2.	Minimum parcel size net area, in acres	0.5	2.0
3.	Lot Width, in feet	100	150
4.	Lot Depth, in feet	100	200
5.	Front Setback, in feet	20	25
6.	Side Interior Setback, in feet	10	15
7.	Side Street Side Setback, in feet	15	20
8.	Rear Setback, in feet	20	25
9.	Lot Coverage, maximum	45%	50%
10.	Structure Height, in feet	35	40
11.	Covered off-street parking spaces per Dwelling Unit	2	1 + 1 open
12.	Open guest parking spaces	Additional 10% of total spaces	
13.	Distance between Structures, in feet	10	10

3. All Setbacks shall be measured from property lines. In situations where an Access Easement is located along a property line, the Setback shall be measured from the interior edge of the Access Easement line. Where an Access Easement bisects any parcel of land, said Easement shall be considered a Street for Setback purposes and Street Side Setbacks shall apply.
4. For Access purposes each parcel shall have a minimum 30 foot wide Access Easement or Right-of-Way. A turnaround with a minimum radius of 25 feet shall be provided at the end of each Access road over 150 feet in length. No fences or other obstructions shall be placed in the Access Easement area except with written permission of all other property owners served by the Easement. For any parcel of land created after January 3, 1995, an Access road to the parcel must be provided prior to the delivery of any combustible Building materials. Said Access road must be constructed to applicable County private road standards.
5. Where a multiple-family Dwelling or Structure, containing 5 or more units, including incidental or required Accessory Uses, Abuts property in an Agricultural Residential, Rural Residential, General or single family zone, a masonry wall or solid wood fence six feet in height and/or screen Landscaping shall be established and maintained between such Uses and adjacent residential zones.

Section 2.3.D: Performance Standards: R**M** Zones

1. **Parking**

   a. **Parking shall be provided per the requirements of the Use of the property.**

   b. Required Front and Street Side Setbacks shall not be used for parking or storage of any motor vehicle or vehicle accessory such as camper shells, trailers, motor bikes, or other wheeled accessory or convenience, except that operable motor vehicles may be parked upon the driveway or Access way to the Garage or Carport.

   c. One motor vehicle or Travel Trailer for sale may be parked on or adjacent to the driveway but not elsewhere in the Front or Street Side Yard Setbacks.

   d. Licensed and operable motor vehicles or vehicle accessories with signage may not be parked or stored within the required Front and Street Side Setbacks, except for overnight parking within a driveway or Access way to the garage or carport. Vehicles and accessories with signage may not be set up on site in such a way as to advertise a Use, product or activity/

   e. Commercial Vehicles exceeding 26,000 lbs.gross vehicle weight (gvw) and associated Commercial Equipment shall not be parked, stored, or serviced in any residential zone.

2. **Landscaping**

   a. ~~In all residential zones,~~ **R**equired Front and Street Side Setbacks shall be landscaped except for necessary walks, drives and fences.

   b. In the RM Zones, the undeveloped site area shall be landscaped. Such required Landscaping may include outdoor recreation areas.

   c. All required Landscaping shall be permanently maintained in a neat and orderly condition.

3. **Lighting**

   No outdoor lighting shall be permitted in the RM zones except as provided in Section.

4. Signs: R**M** Zones

   No Sign or outdoor Advertising Device Structure shall be permitted in any R Zone except as provided in Section 26: Signs.

5. **Projections into required Yards**

   Required Yards and separations shall be maintained free of above ground Structures except as provided in Section

6. Accessory Structures: R**M** Zones

   Accessory Structures (excluding Guest Houses/Accessory Living Quarters) shall be subject to the following restrictions:

1. Bathroom facilities shall be limited to one (1) sink and one (1) toilet.
2. No kitchen facilities or wet bars shall be permitted.
3. The use of Mobile, Manufactured or Modular Homes, semi-trailers, railroad cars, Travel Trailers, camper shells or similar units as Accessory Structures is prohibited.
4. Accessory Structures may not be established prior to the Dwelling Unit or primary Structure ~~except in the RS Zones with minimum Lot sizes of 1 acre or more.~~

7. **Other Performance Standards**

a. Use of a tent, Travel Trailer, Recreational Vehicle or Park Model as a temporary or permanent residence is prohibited.

b. In any multiple family residential zone, a Mobile or Manufactured Home may not be used as a main Dwelling, or Guest Dwelling, except in remote areas on parcels larger than 1 acre where one Mobile or Manufactured Home may be allowed with the granting of a Conditional Use Permit. If the property is later developed with multiple family residential housing, the Mobile or Manufactured Home shall be removed.

c. In all residential zones, air conditioners, heating, cooling, ventilating equipment, swimming pool pumps and heaters and all other mechanical devices shall be screened from surrounding properties and streets and shall be so operated that they do not disturb the peace, quiet, and comfort of neighboring residents. Facilities for the operation of alternate energy systems shall be exempted from the screening requirements when such screening will clearly restrict the efficient operation of such systems.

Section 2.3.E: Condominiums and Condominium Conversions: RM Zones

1. Pre-Application Procedure

Prior to formal application for a Condominium conversion or construction of a Condominium development, the applicant shall meet with the Director of Community Development or his designee to review and discuss the feasibility of the proposed project.

2. Application Procedure

A Conditional Use permit application shall be completed and returned to the Director of Community Development with the following documents:

1. If the application is for a Condominium conversion, a report to the County setting forth all repairs and replacements necessary, if any, to immediately place the Buildings in substantial compliance with current Building and Safety Codes and the probable cost of such work. Said report shall include a report prepared by a licensed mechanical engineer verifying the condition of the mechanical elements in the project, including but not limited to furnaces, air conditioners, pumps, water heaters and plumbing fixtures.

2. If the application is for a Condominium conversion, a pest inspection and written report by a certified inspector.
3. If the application is for a Condominium conversion, a comprehensive Building report which includes age, material and condition where applicable of the following:
    i. Type and age of construction
    ii. Walls, interior and exterior
    iii. Roof
    iv. Garaging
    v. Trash disposal
    vi. Drainage
    vii. Laundry facilities
    viii. Current maintenance activities and programs
    ix. Estimated number of visiting tenants
    x. Length of existing leases and average rents
    xi. Average length of tenancy for existing tenants
    xii. Estimated schedule for conversion
    xiii. Estimated price range of converted units
    xiv. List of improvements contemplated
    xv. Estimate of available similar housing in areas
4. For Condominium and Condominium conversion projects, plot plans shall be submitted indicating the following minimum information:
    i. Location, height, the gross floor area and proposed Uses of each existing Structure and for each proposed Structure.
    ii. Location, use and type of surfacing of all open storage areas.
    iii. Location and type of surfacing of all driveways, pedestrian ways, vehicle parking areas and curb cuts.
    iv. Location, height and type of materials for all walls and fences.
    v. Location of all landscaped areas, type of Landscaping, irrigation plans and a statement specifying the method by which Landscaping areas shall be maintained.
    vi. Location of all Recreational Facilities and a statement specifying the method of maintenance thereof.
    vii. Location of parking facilities to be used in conjunction with each Dwelling Unit.
    viii. Location, elevation, and type and color of materials to be employed and methods of illumination for Signs.
5. Structural elevations shall be required at the discretion of the Director of Community Development. Elevations shall indicate type of materials used

in construction, as well as the method used to provide sound insulation/ attenuation in all common walls.

6. Such other information as may be determined by the Director of Community Development.

3. Standards of Development

   a. A Tentative Tract Map for a Condominium development shall be prepared and submitted to the County, in accordance with the Subdivision Ordinance of Coconino County.

   b. All Condominiums and Condominium conversions shall be developed in accordance with Dwelling Unit requirements as set forth by the Plumbing and Electrical Codes adopted by the County of Coconino.

   c. All existing Buildings and Structures shall be made to comply with all applicable building regulations of the County in effect at the time of filing a Conditional Use permit.

   d. Utility systems shall exist or shall be constructed to adequately provide for utility services to all Condominium units.

   e. Each existing tenant of the project shall be given a 120 day notification on the intended Condominium conversion and the right to purchase his converted multiple Dwelling Unit prior to the unit being placed for sale.

4. Special Conditions

   a. Copies of the required Covenants, Conditions and Restrictions, Articles of Incorporation and By-Laws or other documents of the owner's association or other entity which controls the common facilities shall be submitted to the County for approval and shall set forth the occupancy and management policies for the project, as well as contain adequate and satisfactory provisions for maintenance, repair and general upkeep.

   b. A minimum of two covered parking spaces shall be provided for each Dwelling Unit. An additional parking space for guests shall be provided for each two Dwelling Units. Guest parking spaces may be open. For new developments, off-street parking spaces shall be located on the same lot as the Condominium unit or shall be constructed as an integral part of the Condominium unit.

   c. A minimum area of 400 square feet per unit shall be provided in all Condominium projects for recreational purposes. Patios of individual units may be included in the satisfaction of this condition.

   d. The County may vary from any or all of these conditions in order to ensure compatibility of the Use with surrounding developments and Uses and in order to preserve the public health, safety and welfare.

5. Findings

   The Planning and Zoning Commission shall make the findings contained in Section 30.2-7 hereof prior to the granting of a Conditional Use permit for a Condominium

or Condominium conversion project.

SECTION 2.4: RMH -- RESIDENTIAL AND MANUFACTURED HOME ZONE

Section 2.4.A: Purposes

In addition to the objectives outlined in Section 1.1 Purpose and Scope, the **RMH - Residential and Manufactured Home Zone** is designed to achieve the following purposes:

To provide and identify residential areas and developments where either conventionally constructed single family residences or Manufactured Homes may be located within the same subdivision and thereby provide for opportunity for a greater range of housing styles for existing and future residents.

Section 2.4.B: Permitted and Conditional Uses -- RMH Zone

The following Uses shall be permitted where the symbol "P" appears and shall be permitted Uses subject to the granting of a Conditional Use permit where the symbol "C" appears. All Uses not listed are prohibited. For Uses similar to those listed, see Section 30.1.

RESIDENTIAL USES		RMH Zone
Establishment of Residential Uses shall require applicable Building and Environmental Quality Permits		
1.	Single Family Dwelling or Modular Home	P
2.	Manufactured Home	P
3.	Mobile Homes subject to the provisions of Section 22.10.C.1.e	P
4.	Group Homes for the Handicapped, subject to the provisions of Section 24.6	P
5.	Institutional Residential and other Group Homes	C
6.	**Vacation Rental subject to the provisions of Section**	**P**

AGRICULTURAL RELATED USES		RMH Zone
7.	Agriculture and ~~Gardening~~ **Animal Keeping subject to the provisions of Section**	P
8.	~~Sale of products raised on the premises~~	~~P~~

PUBLIC AND SEMI-PUBLIC USES		RMH Zone
Where public or semi-public Uses are established, a masonry wall or solid wood fence six feet in height as measured from the highest adjacent Grade and screen Landscaping shall be erected and maintained between such Uses and adjacent residential Uses or properties. In the RMH Zone, a Building used for public or semi-public Uses shall maintain a minimum setback of 50 feet from any property line. Interior Side and Rear Setback may be used for off-street parking, Landscaping, and recreational purposes.		
9.	Churches, convents, monasteries and other religious institutions	C

Public and Semi-Public Uses		RMH Zone
Where public or semi-public Uses are established, a masonry wall or solid wood fence six feet in height as measured from the highest adjacent Grade and screen Landscaping shall be erected and maintained between such Uses and adjacent residential Uses or properties. In the RMH Zone, a Building used for public or semi-public Uses shall maintain a minimum setback of 50 feet from any property line. Interior Side and Rear Setback may be used for off-street parking, Landscaping, and recreational purposes.		
10.	Day Care Center	P
11.	Educational Institutions, public or private	C
12.	Fire Stations	C
13.	Hospitals	C
14.	Libraries and museums, public or private	C
15.	Pre-schools	C
16.	Public parks and Recreational Facilities	C
17.	Recreational Facilities such as rodeos, country clubs, tennis and aquatic facilities, golf courses, with incidental limited commercial Uses which are commonly associated with and directly related to the primary Use	C
18.	Utility Installations and public service substations, reservoirs, pumping plants, and similar installations, not including public utility offices	C

Home Occupations		RMH Zone
19.	Home occupations subject to the provisions of Section 24.2	P

Accessory Uses		RMH Zone
20.	Accessory Structures located on the same site as a permitted Use	P
21.	Accessory Structures in excess of 3,000 square feet	C
22.	Accessory Uses and Structures located on the same site as a Conditional Use	C
23.	Apparatus needed for the operation of active or passive solar energy systems or other alternative energy systems, including but not limited to, overhangs, movable insulating walls and roofs, attached or detached solar collectors, reflectors and piping ~~shall be permitted for any Use subject to the applicable provisions of the Zone.~~	P

Temporary Uses		RMH Zone
24.	Temporary uses as prescribed in Section 24.1	P
25.	Model homes and subdivision sales offices	C

Section 2.4.C: Property Development Standards - RMH Zone

1. The following property development standards shall apply to all land and Buildings,

except that any Lot shown on an official subdivision map duly approved and recorded, or any Lot for which a bona fide deed was duly recorded in conformance with the zoning in effect prior to the date of adoption of this Ordinance, may be used as a Building Site.-

2. The following requirements are minimum unless otherwise noted:

Property Development Standards		RMH Zone
1.	Density, maximum Dwelling Units per acre	6.0
2.	Dwelling Unit per parcel, maximum	1
3.	Minimum parcel size, net area in square feet	6,000
4.	Lot Width	50 feet
5.	Lot Depth	100 feet
6.	Front Setback	15 feet
7.	Side Setback	5 feet
8.	Side Street Side Setback	10 feet
9.	Rear Setback	10 feet
10.	Lot Coverage, maximum	40%
11.	Structure Height	35 feet
12.	Off-street parking spaces per Dwelling Unit	2 spaces
13.	Distance between Structures	10 feet

3. All Setbacks shall be measured from property lines. In situations where an Access Easement is located along a property line, the Setback shall be measured from the interior edge of the Access Easement line. Where an Access Easement bisects any parcel of land, said Easement shall be considered a Street for Setback purposes and Street Side Setbacks shall apply.
4. For Access purposes each Building Site shall have a minimum 30 foot wide Easement or Right-of-Way. A turnaround with a minimum radius of 25 feet shall be provided at the end of each Easement over 150 feet in length. No fences or other obstructions shall be placed in the Easement area except with written permission of all other property owners served by the Easement. For any parcel of land created after January 3, 1995, an Access road to the parcel must be provided prior to the delivery of any combustible Building materials. Said Access road must be constructed to the standards found in Ordinance Number 95-1, the Ordinance for Road Standards.
5. In the RMH Zone, Front Setbacks in subdivision developments may be reduced by 25 percent provided the average of all such Setbacks is not less than the minimum required for the zone.

Section 2.4.D: Performance Standards - RMH Zone

1. **Parking**
   a. **Parking shall be provided per the requirements of the Use of the property.**
   b. Required Front and Street Side Setbacks shall not be used for the parking or

storage of any motor vehicle or vehicle accessory such as camper shells, trailers, motor bikes, or other wheeled accessory or convenience, except that operable motor vehicles may be parked upon the driveway or Access way to the Garage or Carport.

c. One motor vehicle or Travel Trailer for sale may be parked on or adjacent to the driveway but not elsewhere in the Front or Street Side Setbacks.

d. Licensed and operable motor vehicles or vehicle accessories with signage may not be parked or stored within the required Front and Street Side Setbacks, except for overnight parking within a driveway or Access way to the garage or carport. Vehicles and accessories with signage may not be set up on Site in such a way as to advertise a Use, product or activity.

2. **Landscaping**

Required Front and Street Side Setbacks shall be landscaped except for necessary walks, drives and fences. All required Landscaping shall be permanently maintained in a neat and orderly condition

3. **Lighting**

No outdoor lighting shall be permitted in the RHM Zone except as provided in Section

4. Signs

No Sign or outdoor Advertising Device shall be permitted in any RMH Zone except as provided in Section 26: Signs.

5. **Projections into Required Yards**

Required Yards and separations shall be maintained free of above ground Structures except as provided in Section

6. Accessory Structures -- RMH Zone

a. Accessory Structures shall be subject to the following restrictions:

1. Bathroom facilities shall be limited to one (1) sink and one (1) toilet.
2. No kitchen facilities or wet bars shall be permitted.
3. The use of Mobile, Manufactured or Modular Homes, semi-trailers, railroad cars, Travel Trailers, camper shells or similar units as Accessory Structures is prohibited.
4. Accessory Structures may not be established prior to the Dwelling Unit or primary Structure.

7. **Other Performance Standards**

a. Air conditioners, heating, cooling, ventilating equipment, swimming pool pumps and heaters and all other mechanical devices shall be screened from surrounding properties and Streets and shall be so operated that they do not disturb the peace, quiet, and comfort of neighboring residents. Facilities for the operation of alternate energy systems shall be exempted from the screening requirements

when such screening will clearly restrict the efficient operation of such systems.

b. The establishment of a pre-HUD Mobile Home may be permitted subject to the rehabilitation of that unit in accordance with the Arizona Office of Manufactured Housing administrative rules and subject to an insignia of approval having been placed by the state on the home. Mobile Homes shall not be relocated and placed on-site prior to renovation and rehabilitation as provided for in this Ordinance.

SECTION 2.5: MHP -- MANUFACTURED HOME PARK ZONE

Section 2.5.A: Purpose

1. In addition to the objectives outlined in Section 1.1: Purpose and Scope, the **MHP - Manufactured Home Park Zone** is designed to achieve the following purposes:
    a. To provide for the exclusive development of Manufactured Home Parks. All Manufactured Home Parks hereinafter shall be developed in accordance with the provisions of this Section.

Section 2.5.B: Permitted and Conditional Uses -- MHP Zone:

1. The following Uses shall be permitted where the symbol "P" appears and shall be permitted Uses subject to a Conditional Use permit where the symbol "C" appears in the column to the right. All Uses not listed are prohibited. For Uses similar to those listed, see Section 30.1.

RESIDENTIAL USES		MHP Zone
Establishment of Residential Uses shall require applicable Building and Environmental Quality Permits		
1.	Group Homes for the Handicapped, subject to the provisions of Section 24.6	P
2.	Institutional Residential including other Group Homes	C
3.	Manufactured Home	P
4.	Mobile Homes subject to the provisions of Section 22.1-6M	P
5.	Modular Home	P
6.	Travel Trailer or Park Model (8' x 32' minimum size)	C
7.	**Vacation Rental subject to the Provisions of Section**	**P**

AGRICULTURAL AND RELATED USES		MHP Zone
8.	Agriculture and ~~Gardening~~ **Animal Keeping subject to the provisions of Section**	P

PUBLIC AND SEMI-PUBLIC USES		MHP Zone
Where public or semi-public Uses are established, a masonry wall, or solid wood fence six (6) feet in height as measured from the highest adjacent Grade and screen Landscaping shall be erected and maintained between such Uses and adjacent residential Uses on properties.		
9.	Churches, convents, and other religious institutions	C
10.	Day Care Center	P
11.	Educational Institutions, public or private	C
12.	Fire Stations	C
13.	Pre-school	C
14.	Public parks and Recreational Facilities	C

Public and Semi-Public Uses		MHP Zone
Where public or semi-public Uses are established, a masonry wall, or solid wood fence six (6) feet in height as measured from the highest adjacent Grade and screen Landscaping shall be erected and maintained between such Uses and adjacent residential Uses on properties.		
15.	Utility Installations and public service sub-stations, reservoirs, water storage tanks, pumping plants, or similar installations not including public utility offices	C

Home Occupations		MHP Zone
16.	Home occupations subject to provisions of Section 24.2.	P

Accessory Uses		MHP Zone
17.	Accessory Structures located on the same site as a permitted Use.	P
18.	Accessory Structures in excess of 3,000 square feet	C
19.	Accessory Uses and Structures located on the same site as a Conditional Use.	C
20.	Apparatus needed for the operation of active or passive solar energy systems or other alternative energy systems, including but not limited to, overhangs, movable insulating walls and roofs, attached or detached solar collectors, reflectors and piping ~~shall be permitted for any Use subject to the applicable provisions of the Zone.~~	P

Temporary Uses		MHP Zone
21.	Temporary Uses as subject to the provisions of Section 24.1.	P
22.	Model homes and sales offices.	C
23.	One Recreational Vehicle or Travel Trailer per Lot or parcel may be used for temporary residency not to exceed 100 days per year provided that the Lot or parcel is not already occupied by a Dwelling or other residential Structure. A temporary use permit shall be obtained prior to establishing said temporary residence, and the Travel Trailer or Recreational Vehicle must be removed from the parcel upon the expiration of the temporary use permit. Approval may be subject to conditions.	P

Section 2.5.C: Property Development Standards -- MHP Zone

1. The following are minimum unless otherwise noted:

	Property Development Standards	MHP Zone
1.	Dwelling units per Lot, parcel, or Manufactured Home Space, maximum	1
2.	Space size in square feet (parks and rental spaces)	4000
3.	Lot size in square feet (subdivided lots)	5000
4.	Subdivided Lot Width	0 feet

	Property Development Standards	MHP Zone
5.	Subdivided Lot Depth	100 feet
6.	Front Setback	10 feet
7.	Side Interior Setback	5 feet
8.	Side Street Setback	10 feet
9.	Rear Setback	10 feet
10.	Lot Coverage, maximum	40%
11.	Structure Height, maximum	20 feet
12.	Off-street parking spaces per Dwelling Unit	2 spaces
13.	Distance between Structures	10 feet

2. The following regulations shall apply to the site of a Manufactured Home Park. Additional regulations may be specified as conditions of approval of Design Review by the Planning Commission or as conditions of approval for the establishment of an MHP Zone:

Minimum frontage:	200 feet, continuous Frontage
Density, maximum:	10 units per acre
Minimum Setbacks:	20 feet adjoining a street; 15 feet adjoining an Interior Lot Line
Recreation area:	Minimum of 250 square feet of recreation area for each Manufactured Home Space. This requirement shall be increased to 300 square feet per Manufactured Home Space if children under the age of 18 are permitted within the development

Section 2.5.D: ~~Interior~~ Site Development Standards -- MHP Zone

1. The following requirements shall apply to development of Manufactured Home Spaces and to facilities within a Manufactured Home Park. Additional requirements may be specified as conditions of Design Review or as conditions of approval for the establishment of an MHP Zone:

    a. Manufactured Home Spaces

        1. Each space shall contain a minimum of 4,000 square feet for exclusive use by the occupants of the space. Each space shall have at least 40 feet of width adjoining an Access drive. Each space shall have dimensions capable of accommodating a rectangle with minimum dimensions of 45 feet by 65 feet.

        2. ~~Manufactured Home Placement.~~

        3. Each Manufactured Home shall be located not less than 5 feet from the boundary of a Manufactured Home Space, except that Carports, patio covers, storage Buildings, and similar Structures accessory to a Manufactured Home may be located not less than 4 feet from the boundary of a Manufactured Home Space.

        4. Building Permits. A Building Permit shall be required for the establishment of a Manufactured Home within a Manufactured Home

Park.

5. Minimum Size Manufactured Home. The minimum size for a Manufactured Home established within a Manufactured Home Park shall be 12 feet by 50 feet.

b. Circulation and Parking

1. Access Drives. All Manufactured Home Access drives within a Manufactured Home Park shall be privately owned, and shall have at least 28 feet of pavement width, exclusive of adjoining parking areas, and shall be constructed to County standards.
2. Parking. Two on-site parking spaces shall be provided for each Manufactured Home Space.
3. Guest Parking. Guest parking or Recreational Vehicle storage areas shall be provided as required by the Commission.
4. Sidewalks. Sidewalks at least 5 feet in width shall be provided to serve each Manufactured Home space and to serve all central or common facilities within the Manufactured Home Park. Sidewalks need not adjoin Access drives

c. Screening and Landscaping ~~-- MHP Zone~~

Screening shall be provided around the entire site of a Manufactured Home Park except that, where a required Setback adjoins a Street, screening shall be located at the rear of the required Setback. Required Setbacks shall be landscaped and said Landscaping shall consist predominantly of plant materials except for necessary walks, drives and fences. All required Landscaping shall be permanently maintained in a neat and orderly condition.

d. Accessory Structures and Uses.

Accessory Structures and Uses serving the entire Manufactured Home Park, including Recreation Facilities, laundry areas, Manufactured Home Park offices, and maintenance or storage Buildings, shall be located at least 50 feet from the boundary of the Manufactured Home Park Site. All exterior maintenance or storage areas shall be enclosed by a 6 foot high masonry wall.

Section 2.5.E: Performance Standards

1. **Parking**

a. Required Front and Street Side Setbacks shall not be used for the parking or storage of any motor vehicle or vehicle accessory such as camper shells, trailers, motor bikes, or other wheeled accessory or convenience, except that operable motor vehicles may be parked upon the driveway or Access way to the Garage or Carport.

b. One motor vehicle or Travel Trailer for sale may be parked on or adjacent to the driveway but not elsewhere in the Front or Street Side Setbacks.

c. Licensed and operable motor vehicles or vehicle accessories with signage may

not be parked or stored within the required Front and Street Side Setbacks, except for overnight parking within a driveway or Access way to the garage or carport. Vehicles and accessories with signage may not be set up on Site in such a way as to advertise a Use, product or activity.

d. The overnight parking of Commercial Vehicles and Commercial Equipment, including but not limited to semi-tractors, semi-trailers, dump trucks, equipment trailers, backhoes, etc., is prohibited in the Manufactured Home Park Zone.

2. **Landscaping**

a. Landscaping. Not less than 20 percent of each Manufactured Home Space shall be landscaped, including at least one tree (minimum 5 gallon size) on each space.

b. Required Front and Street Side Setbacks shall be landscaped except for necessary walks, drives and fences. All required Landscaping shall be permanently maintained in a neat and orderly condition

3. **Lighting**

a. No outdoor lighting shall be permitted in the MHP Zone except as provided in Section

4. Signs

a. No Sign or outdoor Advertising Device shall be permitted in any MHP Zone except as provided in Section 26: Signs.

5. **Projections into Required Yards**

a. Required Yards and separations shall be maintained free of above ground Structures except as provided in Section

6. **Accessory Structures**

a. Cabanas. A Cabana may be attached to a Manufactured Home providing the Cabana shall be complimentary to the design and coloration of the Manufactured Home.

1. A Cabana is a portable and demountable room or enclosure: This shall be interpreted to mean that such additions shall be constructed on only pier type foundations.

2. A Cabana is used in conjunction with a Manufactured Home: This shall be interpreted to mean that the interior square footage of the Cabana shall not exceed that of the Manufactured Home it is attached to; and that the Cabana shall be directly attached to the Manufactured Home so as to provide interior Access. Maximum height of the addition shall not exceed fifteen (15) feet.

3. A Cabana is a room, enclosure or other Building: This shall be interpreted to mean that stick-built type of additions constructed on-site shall be in conformance with the applicable Building Codes as it pertains to other

conventional Structures built in Coconino County.

b. Accessory Structures shall be subject to the following restrictions:

1. Bathroom facilities shall be limited to one (1) sink and one (1) toilet.
2. No kitchen facilities or wet bars shall be permitted.
3. The use of Mobile, Manufactured or Modular Homes, semi-trailers, railroad cars, Travel Trailers, camper shells or similar units as Accessory Structures is prohibited.
4. Accessory Structures may not be established prior to the Dwelling Unit or primary Structure.

c. Attached Structures

1. An Accessory Structure that is attached to a main Structure shall meet all of the requirements for location of the main Structure except as provided in "E" of this Section.

7. **Other Performance Standards**

a. ~~Skirting.~~ Skirting shall be required for each Manufactured Home, and shall be complimentary to the design and coloration of the Manufactured Home.

b. Mobile Homes. The establishment of a pre-HUD Mobile Home may be permitted subject to the rehabilitation of that unit in accordance with the Arizona Office of Manufactured Housing administrative rules and subject to an insignia of approval having been placed by the state on the home. Mobile Homes shall not be relocated and placed on-site prior to renovation and rehabilitation as provided for in this Ordinance.

c. Air conditioners, heating, cooling, ventilating equipment, swimming pool pumps and heaters and all other mechanical devices shall be screened from surrounding properties and Streets and shall be so operated that they do not disturb the peace, quiet, and comfort of neighboring residents. Facilities for the operation of alternate energy systems shall be exempted from the screening requirements when such screening will clearly restrict the efficient operation of such systems.

Section 2.5.F: ~~Application Requirements~~-- **Administration Requirements** MHP Zone

1. Pre-Application Procedure-~~-MHP Zone~~

a. Prior to submitting an application for a Manufactured Home Park, the applicant or prospective developer should hold preliminary consultations with the Department of Community Development to obtain information and guidance before entering into binding commitments or incurring substantial expense in the preparation of plans, surveys and other data. Such preliminary consultations should be relative to a general development plan which expresses the concepts to be embodied in the proposed development.

2. Application

a. An application for the establishment of a Manufactured Home Park zone must be accompanied with a general development plan showing the location, design and configuration of each Manufactured Home Space and all Accessory Structures and Uses. The development plan shall also show the location and design of the following:

1. Access drives, sidewalks, and parking spaces;
2. Walls and fences;
3. Lighting;
4. Drainage and sanitary sewer facilities;
5. Electrical and water service;
6. Fire protection facilities;
7. Refuse collection facilities;
8. Landscape plan

b. Water and drainage reports prepared by a registered professional engineer shall be submitted with the application. A report on the proposed wastewater system prepared by a registered sanitary engineer shall also be submitted.

3. Adoption of Development Plan--MHP Zone

a. Prior to the development of the Manufactured Home Park the development plans and maps submitted with the application for a Manufactured Home Park shall be approved and adopted by the Board of Supervisors.

4. Amendments to the Development Plan--MHP Zone

a. All development within the MHP Zone shall comply substantially with the development plans as approved and adopted by the Board of Supervisors. Any amendments to the development plans shall be accomplished in the same manner as an amendment to the zoning regulations as prescribed in Section 30.4.

5. Pre-Existing Manufactured Home Parks--MHP Zone

a. A pre-existing Manufactured Home Park shall not be deemed nonconforming by reason of failure to meet the minimum requirements prescribed by this Section, provided that the regulations of this Section shall apply to the remodeling, enlargement or expansion of an existing Manufactured Home Park.

6. Manufactured Home Park Subdivision

a. The division of land for the establishment of a Manufactured Home subdivision shall comply with all of the requirements of this Section and the County Subdivision Ordinance.

Section 2.6.A: Purposes

1. In addition to the objectives outlined in Section 1.1: Purpose and Scope, the **PRD - Planned Residential Development Zone** is designed to achieve the following purposes:

    a. To facilitate development of areas designated for residential Use on the Comprehensive Plan by permitting greater flexibility and, consequently, more creative and imaginative designs for the development of such residential areas than generally is possible under conventional zoning and subdivision regulations.

    b. These regulations are further intended to promote more economical and efficient Use of the land while providing a harmonious variety of housing choices, a higher level of urban amenities, and preservation of natural and scenic qualities of open spaces.

Section 2.6.B: Permitted and Conditional Uses--PRD Zone:

1. The following Uses shall be permitted where the symbol "P" appears and shall be permitted Uses subject to a Conditional Use permit where the symbol "C" appears in the column to the right. All Uses not listed are prohibited. For Uses similar to those listed, see Section 30.1.

RESIDENTIAL USES		PRD Zone
Establishment of Residential Uses shall require applicable Building and Environmental Quality Permits		
1.	Planned residential developments	P
2.	Group homes for the Handicapped, subject to the provisions of Section 24.6	P
3.	**Vacation Rentals subject to the provisions of Section**	**P**

AGRICULTURAL AND RELATED USES		PRD Zone
4.	Agriculture and ~~Gardening~~ **Animal Keeping subject to the provisions of Section**	P

PUBLIC AND SEMI-PUBLIC USES		PRD Zone
5.	Churches, convents, monasteries and other religious institutions	C
6.	Day Care Centers	P
7.	Educational Institutions, public or private	C
8.	Fire Stations	C

Public and Semi-Public Uses		PRD Zone
9.	Parks, playgrounds, riding and hiking trails, recreational buildings, Structures and facilities; clubhouses, Community Centers and similar Uses; provided, all such Uses are designed for and limited to use by residents of the planned development and their guests.	P
10.	Pre-school	C
11.	Utility installations and public service sub-stations, reservoirs, pumping plants, and similar installations, not including public utility offices.	C
12.	Wireless Telecommunications Facilities subject to the provisions of Section 24.6	C

Home Occupations		PRD Zone
13.	Cottage industries subject to the provisions of Section 24.3	C
14.	Home occupations subject to the provisions of Section 24.2.	P

Accessory Uses		PRD Zone
15.	Accessory Structures located on the same site as a permitted Use	P
16.	Accessory Structures in excess of 3,000 square feet	C
17.	Accessory Uses and Structures located on the same site as a Conditional Use	C
18.	Accessory Wind Energy Systems subject to the provisions of Section 24.9	P
19.	Guest houses and Accessory Living Quarters shall be permitted subject to the provisions of Section 19.1.I.E.3.	P

Temporary Uses		PRD Zone
20.	Temporary uses as subject to the provisions of Section 24.1	P
21.	Model home and subdivision sales offices	C

Section 2.6.C: Property Development Standards -- PRD Zone

1. ~~The following development requirements shall apply to all planned residential developments:~~
2. The following specific site development requirements shall apply to a PRD in any zone; these requirements are minimum unless otherwise noted:

	Property Development Standards	PRD Zone
1.	Site area, in acres	10
2.	Site frontage on public street	200 feet
3.	Front Setback	25 feet
4.	Side Interior Setback	20 feet
5.	Side Street Side Setback	25 feet

	Property Development Standards	PRD Zone
6.	Rear Setback	20 feet
7.	Structure Height, maximum	35 feet
8.	Site coverage, maximum	40%
9.	Parking spaces per unit, covered	1
10.	Guest parking spaces per unit, uncovered	1
11.	Distance between Structures	10 feet

3. There shall be no minimum area requirement for individual lots or individual dwelling sites in a planned residential development.
4. The maximum number of Dwelling Units permitted in a planned residential development shall be determined by dividing the total land area within the boundaries of the proposed development by the density restrictions designated on the Comprehensive Plan or specific plan or by the density restrictions of the existing zone classification or by the action of the Board of Supervisors.
5. No Building, except as hereafter provided, shall be located closer than five feet from an interior vehicular or pedestrian way, court, plaza, open parking lot or any other surfaced area reserved for public use or for use in common by residents of the planned development. Such Setback generally shall be measured from the nearest edge of the surfaced area; provided, however, that where no sidewalk exists in conjunction with a public or private Street, such Setback shall be measured from the nearest edge of the Street Right-of-Way or private road Easement.
6. **Site Compatibility**
   a. The planned residential development shall be designed and developed in a manner compatible with and complimentary to existing and potential residential development in the immediate vicinity of the project site. Site planning on the perimeter shall provide for the protection of the property from adverse surrounding influences, as well as protection of the surrounding areas from potentially adverse influences within the development.

   b. Planned residential developments shall relate harmoniously to the topography of the Site, shall make suitable provision for the preservation of water courses, drainage areas, wooded areas, rough terrain, and similar natural features and areas, and shall be otherwise so designed as to use and retain such natural features and amenities to the best advantage.
7. **Open Space**
   a. Required open space shall comprise at least 35 percent of the total area of the planned development. Land occupied by Buildings, Streets, driveways or parking spaces may not be counted in satisfying this open space requirement; provided, however, that the land occupied by recreational Buildings, Structures or Uses may be counted as required open space.

   b. At least one-half of the required open space may be improved, or may be left in its natural state, particularly if natural features worthy of preservation exist on

Site. Open space left in its natural state shall be kept free of litter and shall at no time constitute a health, safety, fire or flood hazard. Areas devoted to natural or improved flood control channels and those areas encumbered by flowage, floodway or drainage Easements may be applied toward satisfying this portion of the total open space requirement.

c. If development is to be accomplished in stages, the development plan shall coordinate improvement of the open space, the construction of Buildings, Structures and improvements in such open space, and the construction of Dwelling Units in order that each development stage achieves a proportionate share of the total open space of the total planned development.

d. All or any part of the required open space may be reserved for use in common by the residents of the planned development. Areas permanently reserved for common open space shall be reserved for the use and enjoyment of the residents in a manner which makes the County, or a public district or public agency, a party to and entitled to enforce the reservation, subject to approval by the County Attorney. The Planning Commission may require that open space Easements over the required open space be conveyed to the County.

8. **Public Improvements**

a. All public Streets within or Abutting the proposed planned development shall be dedicated and improved to County specifications for the particular classification of Street. When the developer desires to retain any Streets within the development as private Streets, such Streets shall be constructed to County standards and permanently reserved and maintained for their intended purpose by means acceptable to the Board of Supervisors. Other forms of Access, such as pedestrian ways, courts, plazas, driveways or open parking lots shall not be offered for dedication.

b. All utilities within a planned development shall be placed underground. A common central television antenna or receiver may be provided with underground cable service to all Dwelling Units. All other external television or radio antennas shall not be permitted; for the purposes of this Section, appurtenances and associated equipment such as surface-mounted transformers, pedestal-mounted terminal boxes and meter cabinets, and concealed ducts in an underground system may be placed above ground.

c. The type, number and location of fire hydrants and other fire protective devices shall be subject to the specifications of the Planning Commission.

Section 2.6.D: Performance Standards

1. **Parking**

Parking shall be provided per the requirements of the Use of the property.

2. **Lighting**

No outdoor lighting shall be permitted in the PRD zone except as

provided for in Section

3. **Landscaping**

   All required Landscaping shall be permanently maintained in a neat and orderly condition.

4. Signs

   No Sign or outdoor Advertising Device shall be permitted except as provided in Section 26: Signs or as prescribed on the approved development plan.

5. **Projections into Required Yards**

   Required Yards and separations shall be maintained free and clear of above ground Structures except as provided in Section

6. Accessory ~~Uses and~~ Structures

   Accessory Structures shall be subject to the following restrictions:

   1. Bathroom facilities shall be limited to one (1) sink and one (1) toilet.
   2. No kitchen facilities or wet bars shall be permitted.
   3. The use of Mobile, Manufactured or Modular Homes, semi-trailers, railroad cars, Travel Trailers, camper shells or similar units as Accessory Structures is prohibited.
   4. Accessory Structures may not be established prior to the Dwelling Unit or primary Structure.

Section 2.6.E: <u>Administration Requirements</u>

1. Pre-Application Procedure~~--PRD Zone~~

   a. Prior to submitting an application for a planned residential development, the applicant or prospective developer should hold preliminary consultations with the Department of Community Development to obtain information and guidance before entering into binding commitments or incurring substantial expense in the preparation of plans, surveys and other data. Such preliminary consultations should be relative to a general development plan which expresses the concepts to be embodied in the proposed development.

2. Application-Development Plan-~~-PRD Zone~~

   a. An application for a planned residential development must be for a parcel or parcels of land which is under the control of the person or corporation proposing the development. The application shall be accompanied by the following plans and maps:

      1. A boundary survey map of the property; a tentative subdivision map may be substituted if the applicant proposes to subdivide the property.
      2. Topography of the property and the preliminary proposed finished grade shown at contour intervals of not to exceed five feet.

3. The gross land area of the development, the present zoning classification thereof, and the zoning classification and land use of the area surrounding the proposed development, including the location of structures and other improvements.
4. A general development plan with at least the following details shown to scale and dimensioned:
    i. Location of each existing and each proposed structure in the development area, the Use or Uses to be contained therein, the number of stories, the gross building and floor areas, approximate location of entrances and loading points thereof.
    ii. All streets, curb cuts, driving lanes, parking areas, loading areas, public transportation points, and illumination facilities for the same.
    iii. All pedestrian walks, malls and open areas for the use of occupants and members of the public.
    iv. Location and height of all walls, fences and screen planting, including a plan for the landscaping of the development and the method by which such Landscaping is to be accomplished.
    v. Types of surfacing, such as paving, turfing or gravel to be used at the various locations.
    vi. A preliminary grading plan of the area.
    vii. A preliminary report and overall plan describing proposed provisions for storm drainage, sewage disposal, water supply and such other public improvements and utilities as the County Engineer may require.
5. Plans and elevations of Buildings and Structures sufficient to indicate the architectural style and construction standards.
6. The proposed means for assuring continuing existence, maintenance and operation of the various common elements and facilities. If a community association or similar governing structure is to be established, a copy of the covenants, conditions and restrictions (CC & R's) shall be made a part of the record. If the Board of Supervisors deems it necessary, upon advice of the County Attorney, the County of Coconino shall be a party to such CC & R's in order to ensure their continuance and enforceability.
7. Such other information as may be required by the Director of Community Development to permit complete analysis and appraisal of the planned development.

3. Adoption of Development Plan--PRD Zone
    a. The development plans and maps submitted with the application for a planned residential development shall be approved and adopted by the Board of Supervisors and included in the Ordinance establishing the PRD Zone.
4. Amendments to the Development Plan--PRD Zone
    a. All development within the PRD Zone shall comply substantially with the

development plans as approved and adopted by the Board of Supervisors. Any amendments to the development plans shall be accomplished in the same manner as an amendment to the zoning regulations as prescribed in Section 30.4.

5. Findings

   a. As a condition necessary for the granting of a PRD Zone request, the following findings shall be made:

      1. That the development at the location proposed is consistent with and conforms to the goals, objectives and policies of the Comprehensive Plan or specific plan for the area.
      2. That the development and proposed location is consistent with the objectives and standards of the PRD Zone and the Subdivision Ordinance.
      3. That the development at the location proposed and the development standards to be followed or maintained will not be detrimental to the public health, safety or welfare, or materially injurious to properties or improvements in the vicinity.
      4. That the development will promote or preserve environmental qualities and conserve energy usage and energy resources including the protection of adequate sunlight for use of solar energy systems.
      5. That the development will promote any design standards established by the Commission for the community in which the project is to be

         established.

Commercial Zones

Section 2.7.A: Purposes

In addition to the objectives outlined in Section 1.1: Purpose and Scope, the Commercial Zones are included in the Zoning Regulations to achieve the following purposes:

a. To provide appropriately located areas for office Uses, retail stores, service establishments, and Wholesale business, offering commodities and services required by residents of the County and its surrounding market area.

b. To encourage office and commercial Uses to congregate for the convenience of the public and for a mutually beneficial relationship to each other.

c. To provide adequate space to meet the needs of modern commercial development, including off-street parking and loading areas.

d. To minimize traffic congestion and to avoid the overloading of utilities.

e. To protect residential and other commercial properties from noise, odor, smoke, unsightliness, and other objectionable influences incidental to commercial Uses.

f. To promote high standards of Site planning, architecture and landscape design for office and commercial developments within Coconino County.

1. **CN-2/A - Commercial Neighborhood Zone**

   This zone is intended for neighborhood shopping centers which provide limited retail business, service and office facilities for the convenience of residents of the neighborhood. These shopping centers are intended to be compatible with a residential environment at locations indicated on the Comprehensive Plan or on an adopted Specific Plan for an individual community.

2. **CG-10,000 - Commercial General Zone**

   This zone is intended for the location of general retail and Wholesale commercial activities.

3. **CH-10,000 - Commercial Heavy Zone**

   This zone is intended to provide appropriately located areas for establishments catering primarily to highway travelers, visitors to the County or such businesses or uses where direct access to major arterial highways is essential or desirable for their operation.

Section 2.7.B: Permitted and Conditional Uses: Commercial Zones

The following Uses shall be permitted where the symbol “P” appears and shall be permitted Uses subject to a Conditional Use permit where the symbol “C” appears in the column beneath each zone designation. All Uses not listed are prohibited. For Uses similar to those listed, see Section 30.1.

Agricultural and Related Uses		CN-2/A	CG-10,000	CH-10,000
1.	**Agriculture and Animal Keeping subject to the provisions of Section**	P	P	P

Office and Related Uses		CN-2/A	CG-10,000	CH-10,000
2.	Administrative, professional executive offices	P	P	P
3.	Financial institutions	P	P	P
4.	Medical, dental and related health services for humans including laboratories and clinics; only the sale of articles clearly incidental to the services provided shall be permitted	P	P	P
5.	Public utility service offices	P	P	P

General Commercial Uses		CN-2/A	CG-10,000	CH-10,000
6.	Amusement arcades	-	P	P
7.	Animal shelters, hospitals and veterinary facilities	-	C	P
8.	Appliance and hardware stores	C	P	P
9.	Auction houses/stores	-	C	C
10.	Auto Lubrication and Oil Change Operation	-	C	C
11.	Automotive Repair Garage	-	C	C
12.	Automobile sales and services, including rental agencies	-	C	C
13.	Bakeries, Wholesale	-	C	C
14.	Boat and camper sales and services	-	C	C
15.	Bowling alleys and billiard halls	-	C	C
16.	Campgrounds	-	C	C
17.	Car washes	-	C	C
18.	Ceramic studio with outdoor kiln	-	C	C
19.	Cocktail lounges and bars	-	C	C
20.	Contractor's Yards	-	C	C
21.	Convenience Market including fuel island canopies	C	C	P
22.	Drive-In Restaurants	-	P	P
23.	Drive-In Theaters	-	C	C
24.	Dry cleaners	-	P	P
25.	Farm implement and machine sales, rental and repairs	-	C	C
26.	Feed stores	-	C	C
27.	Hotels and Motels	-	C	P

General Commercial Uses		CN-2/A	CG-10,000	CH-10,000
28.	Large retail establishments as defined in Section 17 (establishments over 70,000 square feet are prohibited)	-	C	C
29.	Laundry pick-up and delivery agencies and self-service laundries	C	C	C
30.	Marijuana Dispensaries subject to the provisions of Section 24.9.	-	P	P
31.	Medical Marijuana Cultivation and Infusion Facilities subject to the provisions of Section 24.9	-	-	C
32.	Mortuaries, pet or human	-	C	P
33.	Motorcycle sales and service	-	C	C
34.	Nurseries and garden supply stores	C	C	C
35.	Outdoor Entertainment Venues	-	C	C
36.	Recreational Vehicle sales and service	-	C	C
37.	Recreational Vehicle and Travel Trailer parks	-	C	C
38.	Restaurants conducted within a building including sale of alcoholic beverages, outdoor seating areas 50% or less of indoor seating areas	C	P	P
39.	Restaurant with outdoor seating areas exceeding 50% of indoor seating areas and/or with outside recreation activities.	C	C	C
40.	Retail business establishments, except for Large Retail Establishments as defined in Section 17, conducted entirely within an enclosed building	P	P	P
41.	Retail with outdoor display and sales	C	C	C
42.	Self Service Storage	-	C	P
43.	Skating rinks	-	C	P
44.	Solid waste hauler's yard	-	C	C
45.	Stone and monument yards	-	C	C
46.	Theater	C	C	C
47.	Tire sales and service	-	C	P
48.	Truck and trailer rental, sales and service	-	C	C
49.	Truck stops and travel centers	-	-	C
50.	Vehicular storage yards (not including Auto Wrecking Yards)	-	C	C
51.	Warehousing	-	P	P
52.	Wireless Telecommunications Facilities subject to the provisions of Section 24.6	C	C	C

Public and Semi-Public Uses		CN-2/A	CG-10,000	CH-10,000
53.	Banquet halls, conference centers and wedding facilities	C	C	C
54.	Churches	-	C	C
55.	Clubs and lodges including YMCA, YWCA and similar youth group Uses	-	C	C
56.	Commercial trade or vocational schools	C	P	P
57.	Convalescent Homes and Hospital	-	C	C
58.	Day Care Centers and Pre-schools	C	C	C
59.	Educational Institutions, public or private	-	C	C
60.	Fire Stations	C	C	C
61.	Libraries and museums, public or private	C	C	C
62.	Parks and Recreational Facilities, public or private, including tennis, racquetball and handball clubs and facilities	-	C	C
63.	Post office branch	P	P	P
64.	Utility Installations and public service sub-stations, reservoirs, pumping plants, and similar installations, not including public utility offices	C	C	C

Accessory Uses		CN-2/A	CG-10,000	CH-10,000
65.	Accessory solar and geo-thermal facilities	P	P	P
66.	Accessory Structures located on the same site as a permitted use	P	P	P
67.	Accessory Uses and Structures located on the same site as a conditional use	C	C	C
68.	A Single Family Residence established as an integral part of the commercial operation, for exclusive use by the owner/operator of the business	-	C	C
69.	Accessory retail propane sales, tanks 2000 gallons or less,subject to the issuance of a building permit	-	P	P
70.	Accessory Wind Energy Systems subject to the provisions of Section 24.9	-	P	P
71.	Employee Housing as an integral part of the commercial operation	-	C	C
72.	Metal Storage Containers as prescribed in Section 24.8	-	P	P

Temporary Uses		CN-2/A	CG-10,000	CH-10,000
73.	Temporary uses as prescribed in Section 24.1	P	P	P
74.	Modular Office Structures during construction of a permanent Building for a period not to exceed 12 months with the issuance of a temporary use permit	P	P	P

Section 2.7.C: Property Development Standards: Commercial Zones

1. The following property development standards shall apply to all land and Structures permitted in their respective commercial zones, except that, any Lot shown on an official subdivision map that was duly recorded, or any Lot for which a bona fide deed was duly recorded in conformance with the zoning in effect prior to the date of adoption of this Ordinance, may be used as a Building Site.
2. The following requirements are minimums unless otherwise noted:

Property Development Standards		CN-2/A	CG-10,000	CH-10,000
1.	Minimum parcel size, square feet or acres	2 acres	10,000 sf	10,000 sf
2.	Lot Width, in feet	200	60	50
3.	Lot Depth, in feet	150	100	100
4.	Front Setback, in feet	20	20	20
5.	Side Interior Setback, in feet	10	-	-
6.	Side Interior and Rear Yard Setback, in feet, adjacent to any non-commercial or industrial zone	20	20	20
7.	Side Street Setback, in feet	10	20	20
8.	Rear Setback, in feet	10	0	0
9.	Lot Coverage, maximum	35%		
10.	Structure Height, maximum, in feet	35	35	50
11.	Off-street parking	See Section 25		

3. All Setbacks shall be measured from property lines. In situations where an Access Easement is located along a property line, the Setback shall be measured from the interior edge of any Access Easement line. Where an Access Easement bisects any parcel of land, said Easement shall be considered a Street for Setback purposes and Street Side Setbacks shall apply.
4. For Access purposes each Building Site shall have a minimum 30 foot wide Easement or Right-of-Way. A turnaround with a minimum radius of 25 feet shall be provided at the end of each Easement over 150 feet in length. No fences or other obstructions shall be placed in the Easement area except with written permission of all other property owners served by the Easement. For any parcel of land created after January 3, 1995, an Access road to the parcel must be provided prior to the delivery of any combustible Building materials. Said Access road must be constructed to the standards found in Ordinance Number 95-1, the Ordinance for Road Standards.

Section 2.7.D: Performance Standards: Commercial Zones

1. **Parking**

   Wherever off-street parking areas are situated across the Street from property in a non-commercial or industrial zones, a masonry wall or berm three feet in height shall be erected between the required landscaped area and the parking area to adequately screen said parking areas from the residential properties.

2. Landscaping: ~~Commercial Zones~~

   a. Landscaping shall be provided in any commercial zone as required in Section 28: Landscaping.

   b. In all Commercial Zones, required Front and Street Side Setbacks shall be landscaped in accordance with Section 28: Landscaping to a depth of not less than 10 feet. Remaining Front and Street Side Setbacks may be used for required off-street parking.

3. **Screening**

   a. Where a commercial or office Use Abuts property in any commercial or industrial zone, a masonry wall six (6) feet in height as measured from the highest adjacent Grade shall be erected and maintained between such Uses and the residential zone. Alternatives to masonry, including double-sided solid wood fencing, stuccoed wood frame walls, native stone or rock veneered walls or an adequate vegetative buffer, may be approved by the Director of Community Development or the Planning and Zoning Commission.

   b. All mechanical equipment, including heating and air conditioning units, shall be completely screened from surrounding properties by use of a wall or fence or shall be enclosed within a Building. Facilities for the operation of solar or alternate energy systems may be exempted from this requirement subject to the approval of the Director of Community Development.

   c. Waste receptacles enclosed with solid masonry walls and with gates shall be provided for each commercial use. Said receptacles shall be set back a minimum of 20 feet from any non-commercial or industrial zone boundary and shall be maintained in a neat and sanitary condition in order to safeguard the health, safety and general welfare of adjacent properties subject to the approval of the Director of Community Development. Alternatives to constructed enclosures may be approved by the Community Development Director.

   d. Methods of screening for outdoor storage may include wooden fencing, masonry walls, rock walls, landscaped berms or vegetative screening subject to the approval of the Director of Community Development. All facilities for outdoor storage shall be subject to the review and approval of the Planning and Zoning Commission.

4. Lighting: ~~Commercial Zones~~

   a. No exterior lighting shall be permitted in any commercial zone except as provided in Section 27: Lighting.

b. The operation of searchlights or similar lighting sources for advertising display or any other commercial purpose is prohibited.

5. **Projections into Required Yards**

   Required Yards and separations shall be maintained free and clear of above ground Structures except as provided in Section

6. Signs:

   No Sign or outdoor Advertising Device shall be permitted in any commercial zone except as provided in Section 26: Signs.

7. Accessory Structures:

   a. In any Commercial Zone, Accessory Structures shall not be located in front of the main Building except as provided for in Section 20.7.D or unless otherwise approved through a Conditional Use permit.

   b. The use of Mobile Homes, semi-trailers, railroad cars, Travel Trailers, camper shells, or similar units as Accessory Structures is prohibited. Metal Storage Containers may be permitted, refer to Section 24.7.

   c. For the purpose of this Section, swimming pools shall be considered to be a detached Structure. Swimming pools including all Accessory or appurtenant Structures and equipment shall maintain minimum Setback of five feet from all property lines and Buildings. As a precaution against unauthorized use, swimming pools shall be enclosed by a wall or fence not less than 6 feet in height to the specifications of the Department of Community Development.

8. **Other Performance Standards**

   a. The outdoor storage of any items, including but not limited to items for sale, unlicensed and/or inoperable vehicles, Travel Trailers, boats, Recreational Vehicles, or secondhand materials is prohibited, unless a Conditional Use permit is approved by the Planning and Zoning Commission for said outdoor storage.

   b. Noise shall not be generated by any use to the point of disturbing the peace, quiet and comfort of neighboring residences or the operation of businesses.

Section 2.7.E: <u>Administration Requirements</u>

Procedure for the Establishment of CN-2/A Zones

a. Preliminary Development Plans. The application for a CN-2/A Zone classification shall be accompanied by a preliminary development plan consisting of maps, drawings and such other materials necessary to show:

   1. The approximate size, shape and location of all proposed Buildings and the intended uses of all Buildings;
   2. The on-site parking arrangements and design, including loading areas;
   3. The proposed signing policy for all proposed uses;

4. The location and treatment of required and proposed landscape areas;
5. The proposed off-site circulation pattern including Right-of-Way dedications, Street improvements, traffic control measures, location and design of driveway openings, and acceleration/deceleration lanes;
6. Market analysis showing the need for the shopping center at the location requested and the inadequacy of existing zoned Sites to meet this need.
7. The preliminary development plan is required to enable the Commission and the Board of Supervisors to assess the impact of the proposed shopping center on surrounding Uses, its relationship to the objectives of the Comprehensive Plan, its relationship to zoning patterns in the neighborhood, and to permit public agencies and utility services to review the adequacy of proposed improvements and the impact of the development on existing and proposed utilities and facilities.

b. Adoption of Development Plans. The development plans shall be approved by the Board of Supervisors and incorporated into the approval of the CN-2/A Zone.

c. The above procedures shall not apply to the establishment of a CN-2/A Zone classification at an existing neighborhood shopping center.

Section 2.8.A: Purposes

1. In addition to the objectives outlined in Section 1.1: Purpose and Scope, the **RC - Resort Commercial Zone** is designed to achieve the following purposes:
    a. To provide for the exclusive development of resort facilities in a more creative and imaginative fashion than generally is possible under conventional zoning.
    b. To provide for a zone wherein various styles of residential Uses designed for occupancy by guests of limited duration can be established in conjunction with service commercial and recreational Uses in a coordinated, comprehensive and harmonious design.

Section 2.8.B: Permitted and Conditional Uses

1. Those Uses designated on the development plan for the particular PC Zone as approved by the Board of Supervisors.
2. The continuation of all land Uses which existed in the zone at the time of adoption of the development plan. Existing land Uses shall either be incorporated as part of the development plan or shall be terminated in accordance with a specific abatement schedule submitted and approved as part of the development plan.
3. The following Uses shall be permitted where the symbol "P" appears and shall be permitted Uses subject to a Conditional Use permit where the "C appears in the column beneath each zone designation. All Uses not listed are prohibited. For Uses similar to those listed, see Section 30.1.

AGRICULTURE AND RELATED USES		**RC Zone**
1.	**Agriculture and Animal Keeping subject to the provisions of Section**	**P**

PUBLIC AND SEMI-PUBLIC USES		RC Zone
2.	Churches, convents, monasteries and other religious institutions	C
3.	Educational Institutions, public or private	C
4.	Fire Stations	C
5.	Parks, playgrounds, riding and hiking trails, recreational buildings, Structures and facilities; clubhouses, Community Centers and similar Uses; provided, all such Uses are designed for and limited to use by residents of the planned development and their guests.	P
6.	Utility installations and public service sub-stations, reservoirs, pumping Plants, and similar installations, not including public utility offices.	C
7.	Wireless Telecommunications Facilities subject to the provisions of Section 24.6	C

Accessory Uses		RC Zone
8.	Accessory Structures located on the same site as a permitted Use	P
9.	Accessory Wind Energy Systems subject to the provisions of Section 24.9	P

Temporary Uses		RC Zone
10.	Temporary uses as prescribed in Section 24.1	P
11.	Model home and subdivision sales offices	C

Section 2.8.C: Property Development Standards--RC Zone

The area proposed to be contained within an RC Zone shall be not less than five (5) acres.

Section 2.8.D: Administration Requirements

1. The following requirements shall apply to all RC Zoned areas:
    a. An application for a zone change to permit the establishment of an RC Zone shall include and be accompanied by a development plan for the entire property.
    b. An application for a zone change to establish an RC Zone must be for a parcel or parcels of land under the control of the person or corporation proposing the development.
2. Development Plan--RC Zone

    The development plan of a proposed RC Zone should consist of maps, plans, reports, schedules, development standards and schematic drawings and such other documents deemed necessary by the Director of Community Development in accordance with the following requirements:

    1. The development plan submitted in a form approved by the Director of Community Development.
    2. Location of each existing and each proposed Structure in the development area, the Use or Uses to be contained therein, the number of stories, the gross Building and floor areas, approximate location of entrances and loading points thereof.
    3. All Streets, curb cuts, driving lanes, parking areas, loading areas, public transportation points, and illumination facilities for the same.
    4. All pedestrian walks, malls and open areas.
    5. Location and height of all walls, fences and screen planting, including a plan for the Landscaping of the development and the method by which such Landscaping is to be accomplished.
    6. Types of surfacing, such as paving, turfing or gravel to be used at the various locations.
    7. The location and type of proposed Recreational Facilities and utility facilities.
    8. A preliminary report and plan describing proposed provisions for storm

drainage, sewage disposal, water supply and such other improvements and utilities as the County Engineer may require.

9. A topographic map and conceptual grading plan of the subject property.
10. A plan of the proposed Signage.

3. Adoption of Development Plan--RC Zone

The development plan and supporting statements and documents submitted with the application for a resort commercial Use shall be approved and adopted by the Board of Supervisors and included in the Ordinance establishing the RC Zone. All development within the RC Zone shall comply substantially with the development plan as approved and adopted by the Board of Supervisors.

4. Amendments to the Development Plan--RC Zone

Any amendments to the adopted development plan shall be accomplished in the same manner as an amendment to the Zoning Regulations as prescribed in Section 30.4.

Industrial Zones

Section 2.9.A: Purposes

1. In addition to the objectives outlined in Section 1.1: Purpose and Scope, the Industrial Zones are included in the Zoning Regulations to achieve the following purposes:
    a. To provide appropriately located areas for industrial Uses and protect these areas from intrusion by Dwellings and other inharmonious Uses.
    b. To protect residential, commercial and nuisance-free, non-hazardous industrial Uses from noise, odor, dust, smoke, truck traffic and other objectionable influences and from fire, explosion, radiation and other hazards incidental to certain industrial Uses.
    c. To provide sufficient open space around industrial Structures to protect them from hazard and to minimize the impact of industrial plants on nearby residential or commercial zones.
    d. To minimize traffic congestion and to avoid the overloading of utilities by restricting the construction of Buildings of excessive size in relation to the amount of land around them.
2. **MP-20,000 - Industrial Park Zone**
    a. This zone is intended for modern industrial and research developments and administrative facilities that can meet high performance and development standards.
3. **M-1-10,000 - Light Industrial Zone**
    a. This zone is intended for light industrial and limited service commercial Uses that can meet high performance standards but that frequently do not meet site development standards appropriate to planned research and development of industrial parks.
4. **M-2-6,000 - Heavy Industrial Zone**
    a. This zone is intended for heavy industrial Uses in those urban areas of the County which are designated for general industrial Uses on the Comprehensive Plan.

Section 2.9.B: Permitted and Conditional Uses: Industrial Zones

The following Uses shall be permitted Uses where the symbol “P” appears and shall be permitted Uses subject to a Conditional Use permit where the symbol “C” appears in the column beneath each zone designation. All Uses not listed are prohibited. For Uses similar to those listed, see Section 30.1.

Manufacturing Uses		MP-20,000	M-1-10,000	M-2-6,000
1.	Borrow Pits	-	C	C
2.	Bottling plants	P	P	P
3.	Cement products manufacturing	-	C	C
4.	Electronics: electrical and related parts; electrical appliances, motors and devices; radio; television and phonograph	P	P	P
5.	Food and dairy products processing and manufacturing including frozen foods	-	C	C
6.	Furniture manufacturing and upholstering	P	P	P
7.	Instruments: scientific and precision; medical and dental;timing and measuring	P	P	P
8.	Laboratories: dental, medical, electrical, optical and mechanical	P	P	P
9.	Manufacturing and maintenance of electrical and other signs	P	P	P
10.	Machine shop	C	C	P
11.	Manufacture of novelty items, not including fireworks or other explosive-type items	P	P	P
12.	Manufacturing of fireworks or other explosive-type items	-	-	C
13.	Manufacturing, compounding, assembly or treatment of articles or merchandise from the following previously prepared typical materials: Canvas, cellophane, cloth, cork, felt, fiber, fur, glass, leather, paper (no milling), precious or semi-precious stones or metals, non-ferrous metals, plaster, plastics, shells, textiles, tobacco, wood and yarns	P	P	P
14.	Mineral extraction operations	-	C	C
15.	Office and related machinery: audio machinery; computers, electrical and manual; visual and reproductive machinery	P	P	P
16.	Oil pumping, distributing, or storage facility	C	C	C
17.	Packing houses	-	C	C
18.	Pharmaceuticals: cosmetics, drugs, perfumes, toiletries and soap (not including refining or rendering of oils or fats)	P	P	P
19.	Refining or rendering of oils or fats (tallow works)	-	-	C
20.	Rubber and metal stamp manufacturing	P	P	P
21.	Rubber products manufacturing	-	C	C
22.	Stone quarries, gravel pits, mines and stone mills	-	C	C

Wholesale and Warehousing		MP-20,000	M-1-10,000	M-2-6,000
23.	Self-service storage	P	P	P
24.	Wholesale uses and distribution centers	C	P	P
25.	Warehousing operations	P	P	P

Services		MP-20,000	M-1-10,000	M-2-6,000
26.	Airports and heliports	C	C	C
27.	Animal shelter, hospital and veterinary clinics	C	P	P
28.	Automobile, truck and tractor repair and painting	-	P	P
29.	Automobile Wrecking Yards	-	-	C
30.	Automotive sales and services, including rental agencies	C	P	P
31.	Blacksmith operations	-	P	P
32.	Blueprinting and photocopying	P	P	P
33.	Boat, camper and Recreational Vehicle sales and service	C	P	P
34.	Business, professional and research offices	P	P	P
35.	Cleaning and dying plants	-	C	C
36.	Commercial sales establishments dealing principally with industrial customers such as heavy construction and earth-moving equipment, machines, presses, forges, material sales and related uses	-	C	P
37.	Contractor's Yards	-	C	C
38.	Equipment rental yards	-	C	C
39.	Food locker facilities	-	P	P
40.	Fuel sales	-	C	C
41.	Junk Yards	-	-	C
42.	Kennels and Stables	-	C	P
43.	Lumber and building material yards	-	C	C
44.	Newspaper publishing	P	P	P
45.	Plumbing shops	-	P	P
46.	Printing and lithography	P	P	P
47.	Restaurants	C	C	C
48.	Rock, sand and gravel yards	-	C	C
49.	Service stations	C	C	C
50.	Tire retreading and recapping	-	C	C
51.	Trucking Yards and Truck Stops	-	C	C
52.	Solid waste hauler's yard	-	C	C

Services		MP-20,000	M-1-10,000	M-2-6,000
53.	Wireless Telecommunications Facilities subject to the provisions of Section 24.6	C	C	C

Public and Semi-Public Uses		MP-20,000	M-1-10,000	M-2-6,000
54.	Post offices and postal terminals	C	C	C
55.	Public utility service yards	-	C	C
56.	Sanitary landfill operations	-	-	C
57.	Utility Installations and public service sub-stations, reservoirs, pumping plants, and similar installations, not including public utility offices	C	C	C

Agricultural and Related Uses		MP-20,000	M-1-10,000	M-2-6,000
58.	~~Agricultural including the sale of products raised on the premises~~ **Agriculture and Animal Keeping subject to the provisions of Section**	P	P	P
59.	Commercial Feedlot	-	C	C
60.	Commercial fertilizer operations	-	C	C
61.	Domestic animal ranch or farming operations	P	P	P
62.	Lumber mills and processing plants	-	C	P
63.	Meat Processing plants	-	C	C
64.	Medical Marijuana off-site cultivation and infusion facilities subject to the provisions of Section 24.9	-	P	P

Accessory Uses		MP-20,000	M-1-10,000	M-2-6,000
65.	Accessory solar and geo-thermal facilities	P	P	P
66.	Accessory Structures located on the same site as a permitted or conditional use	P	P	P
67.	Accessory Wind Energy Systems subject to the provisions of Section 24.9	P	P	P
68.	Incidental services for employees on a site occupied by a permitted or conditional use	P	P	P
69.	Metal Storage Containers as prescribed in Section 24.8	-	P	P
70.	Watchman's or caretaker's living quarters only when incidental to and on the same site as a permitted or conditional use	P	P	P

Accessory Uses		MP-20,000	M-1-10,000	M-2-6,000
71.	Apparatus needed for the operation of active or passive solar energy systems or other alternate energy systems, including but not limited to, overhangs, movable insulating walls and roofs, attached or detached solar collectors, reflectors and piping ~~may be permitted for any use subject to the approval and specifications of the Director of Community Development~~.	P	P	P

Temporary Uses		MP-20,000	M-1-10,000	M-2-6,000
72.	Temporary uses as prescribed in Section 24.1	P	P	P

Section 2.9.C: Property Development Standards: Industrial Zones

1. The following property development standards shall apply to all land and Buildings permitted in their respective industrial zones, except that, any Lot for which a bona fide deed was duly recorded in conformance with the zoning in effect prior to the date of adoption of this Ordinance, may be used as a Building Site.
   a. ~~Special Requirements~~
   b. ~~General Requirements:~~
2. The following requirements are minimum unless otherwise noted.

Property Development Standards		MP-20,000	M-1-10,000	M-2-6,000
1.	Minimum parcel size, in square feet	20,000	10,000	6,000
2.	Lot Width, in feet	100	100	60
3.	Lot Depth, in feet	150	100	100
4.	Front Setback, in feet	20	10	10
5.	Side Interior Setback, in feet	15	--	--
6.	Side Street Side Setback, in feet	20	10	10
7.	Rear Setback, in feet	20	--	--
8.	Lot Coverage, maximum	60%	60%	--
9.	Structure Height, in feet	40	50	50
10.	Off-street parking	See Section 25		

3. For access purposes each Building Site shall have a minimum 30 foot wide Easement or right-of-way. A turnaround with a minimum radius of 25 feet shall be provided at the end of each Easement over 150 feet in length. No fences or other obstructions shall be placed in the Easement area except with written permission of all other property owners

served by the Easement. For any parcel of land created after January 3, 1995, an Access road to the parcel must be provided prior to the delivery of any combustible Building materials. Said Access road must be constructed to the standards found in Ordinance Number 95-1, the Ordinance for Road Standards.

4. When any industrial zone Abuts or is situated across the Street from property in any non-commercial or industrial zone, a minimum Building Setback of 50 feet shall be required from such residential zone; provided, however, that the 20 feet of said Setback nearest the Street or zone boundary line shall be landscaped and the remainder may be used for off-street parking purposes as provided in Section 25: Off Street Parking. A three foot high wall or berm shall be constructed in back of the landscaped area along street Setbacks; along all other Lot Lines adjacent to residential zones, a six foot high wall as measured from the highest adjacent Grade and screen landscaping shall be erected and maintained.

Section 2.9.D: Performance Standards: Industrial Zones

1. **Parking**

   Parking shall be provided per the requirements of the Use of the property.

2. Landscaping:

   a. Landscaping shall be permitted in any Industrial Zone as provided in Section 28: Landscaping.

   b. In all industrial zones, required Front and Street Side Setbacks shall be landscaped to a depth of not less than ten feet in accordance with Section 28: Landscaping. Remaining Front and Street Side Setbacks may be used for required off-street parking. All required Landscaping shall be permanently maintained in a neat and orderly condition.

3. **Screening**

   a. Methods of screening for outdoor storage may include wooden fencing, masonry walls, rock walls, landscaped berms or vegetative screening subject to the approval of the Director of Community Development. All facilities for outdoor storage shall be subject to the review and approval of the Planning & Zoning Commission.

   b. Waste receptacles enclosed with solid masonry walls and with gates shall be provided for each industrial Use. Said receptacles shall be set back a minimum of 20 feet from any non-commercial or industrial zone boundary and shall be maintained in a neat and sanitary condition in order to safeguard the health, safety and general welfare of adjacent properties, subject to the approval of the Director of Community Development. Alternatives to constructed enclosures may be approved by the Community Development Director.

   c. All mechanical equipment, including heating and air conditioning units, and waste receptacle areas shall be completely screened from surrounding properties by use of a wall or fence or shall be enclosed within a Building. Facilities for the

operation of solar or other alternate energy systems may be exempted from this requirement subject to the approval of the Director of Community Development.

4. Lighting:

   No exterior lighting shall be permitted in any Industrial Zone except as provided in Section 27: Lighting.

5. Signs:

   No Sign or outdoor Advertising Device shall be permitted in any Industrial Zone except as provided in Section 26: Signs.

6. **Projections into Required Yards**

   Required Yards and separations shall be maintained free of above ground Structures except as provided in Section

7. Accessory Structures:-

   a. In any Industrial Zone, Accessory Structures shall not be located in front of the main Building except when approved through a Conditional Use permit.

   b. In any Industrial Zone, Accessory Structures shall meet all of the Setback requirements for main Buildings.

   c. In any Industrial Zone, Accessory Structures used for the selling of agricultural products shall be subject to the review and approval of the Director of Community Development.

8. **Other Performance Standards**

   a. No Use except a temporary construction operation shall be permitted which creates changes in temperature or direct glare, detectable by the human senses without the aid of instruments, beyond the boundaries of the site. No Use shall be permitted which creates electrical disturbances that affect the operation of any equipment beyond the boundaries of the Site.

   b. All storage of and activities involving inflammable and explosive materials shall be provided with adequate safety and fire fighting devices to the specifications of the County Safety Director. All incineration is prohibited.

   c. No Use shall be permitted which creates annoying odor in such quantities as to be readily detectable beyond the boundaries of the Site.

   d. In all industrial zones, the use of radioactive materials shall be limited to measuring, gauging and calibration devices.

   e. No Use except a temporary construction operation shall be permitted which generates inherent and recurrent ground vibration perceptible, without instruments, at the boundary of the Lot in which the Use is located.

   f. Noise shall not be generated by any Use to the point of disturbing the peace, quiet and comfort of neighboring residences or businesses.

g. No hazardous material shall be disposed on the premises. All such materials shall be transported to a Site officially designated by the State of Arizona for hazardous materials disposal.

h. All solid waste generated by an industrial Use shall be transported to an approved landfill site for proper disposition.

Section 2.9.E: Administration Requirements

1. Whenever there is a question of conformance with the performance standards of this Section, the Director of Community Development shall require the property owner or operator to engage the services of a certified testing firm. Copies of all such tests shall be furnished to the Director.

Special Purpose Zones

Purposes

Because of their special or unique characteristics and the need to implement specific sections of the General Plan, the following Special Purpose Zones are established:

SECTION	ZONE		PAGE
~~22.1~~	~~**MHP**~~	~~**Manufactured Home Park**~~	~~22-2~~
~~22.2~~	~~**PRD**~~	~~**Planned Residential Development**~~	~~22-11~~
22.3	**PC**	**Planned Community**	22-18
22.4	**PS**	**Public and Semi-Public**	22-22
22.5	**OS**	**Open Space and Conservation**	22-24
~~22.6~~	~~**RC**~~	~~**Resort Commercial**~~	~~22-26~~
22.7	**P**	**Parking**	22-29
22.8	**MR**	**Mineral Resource**	22-31
~~22.9~~	~~**RMH**~~	~~**Residential and Manufactured Home**~~	~~22-35~~

Section 2.10.A: Purposes

In addition to the objectives outlined in Section 1.1: Purpose and Scope, the **PC - Planned Community Zone** is designed to achieve the following purposes:

a. To provide for the classification and development of parcels of land as coordinated, comprehensive projects so as to take advantage of the superior environment which can result from large-scale community planning.

b. To allow diversification of land Uses as they relate to each other in a physical and environmental arrangement, while ensuring substantial compliance with the provisions of this Ordinance.

c. To provide for a zone encompassing various types of land uses, such as single-family residential developments, multiple housing developments, professional and administrative office areas, commercial centers, industrial parks or any public or semi-public Use or combination of Uses through the adoption of a development plan and text materials which set forth land use relationships and development standards.

Section 2.10.B: Permitted and Conditional Uses--PC Zone

1. Those Uses designated on the development plan for the particular PC Zone as approved by the Board of Supervisors.
2. The continuation of all land uses which existed in the zone at the time of adoption of the development plan. Existing land uses shall either be incorporated as part of the development plan or shall be terminated in accordance with a specific abatement schedule submitted and approved as part of the development plan.
3. The following Uses shall be permitted where the symbol "P" appears and shall be permitted Uses subject to a Conditional Use permit where the "C appears in the column beneath each zone designation. All Uses not listed are prohibited. For Uses similar to those listed, see Section 30.1.

AGRICULTURAL AND RELATED USES		PC ZONE
1.	**Agriculture and Animal Keeping subject to the provisions of Section**	**P**

PUBLIC AND SEMI-PUBLIC USES		PC Zone
2.	Churches, convents, monasteries and other religious institutions	C
3.	Day Care Center	P
4.	Educational Institutions, public or private	C
5.	Fire Stations	C

Public and Semi-Public Uses		PC Zone
6.	Parks, playgrounds, riding and hiking trails, recreational buildings, Structures and facilities; clubhouses, Community Centers and similar Uses; provided, all such Uses are designed for and limited to use by residents of the planned development and their guests.	P
7.	Pre-school	C
8.	Utility installations and public service sub-stations, reservoirs, pumping plants, and similar installations, not including public utility offices.	C
9.	Wireless Telecommunications Facilities subject to the provisions of Section 24.6	C

Accessory Uses		PC Zone
10.	Accessory Structures located on the same site as a permitted Use	P
11.	Accessory Structures in excess of 3,000 square feet	C
12.	Accessory Uses and Structures located on the same site as a Conditional Use	C
13.	Accessory Wind Energy Systems subject to the provisions of Section 24.9	P

Temporary Uses		PC Zone
14.	Temporary uses as prescribed in Section 24.1	P
15.	Model home and subdivision sales offices	C

Section 2.10.C: Property Development Standards--PC Zone

The area contained within a proposed PC Zone shall not be less than 25 acres.

Section 2.10.D: Performance Standards

1. **Parking**

   Off-street parking facilities shall be provided for each Use as prescribed in Section 25: Off-Street Parking or as specified in a Conditional Use permit.

2. **Screening and Landscaping**

   Screening and Landscaping for a Conditional Use shall be specified in the use permit.

3. **Lighting**

   No Outdoor lighting shall be permitted in the PC Zone except as permitted in Section

4. **Signs**

   No Sign, or outdoor Advertising Device, or display of any character shall be permitted except as prescribed in Section 26: Signs or as authorized in a Conditional Use permit

5. **Projections into Required Yards**

   Required Yards and separations shall be maintained free of above ground Structures except as provided in Section

Section 2.10.E: Administration Requirements

The following requirements shall apply to all PC zoned areas:

a. An application for a zone change to permit the establishment of a PC Zone shall include and be accompanied by a development plan for the entire property.

b. An application for a zone change to establish a PC Zone must be for a parcel or parcels of land under control of the person or corporation proposing the development.

c. A conditional use permit may be required for any land use designation on the development plan.

d. If ambiguity exists as to the specific dimensions or extent of any designated area on the development plan, the specific boundaries shall be set by the filing of a legal description and map of the parcel in question in conjunction with the filing of a conditional use permit, tentative subdivision, or Building Permits.

1. Pre-Application Procedure--PC Zone

   Prior to submitting an application for a PC Zone, the applicant should hold preliminary consultations with the Department of Community Development to obtain information and guidance before entering into binding commitments or incurring substantial expense in the preparation of plans, surveys and other data. Such preliminary consultations should be relative to a preliminary development plan and other material which expresses the relationship between the various land uses and the development concepts to be employed.

2. Development Plan--PC Zone

   The development plan of a proposed PC Zone should consist of maps, plans, reports, schedules, development standards and schematic drawings and such other documents deemed necessary by the Director of Community Development in accordance with the following requirements:

   1. The development plan shall be submitted in a form approved by the Director of Community Development.
   2. The development of sections or areas within the PC Zone may be permitted subject to one of the following or any combination thereof:
      i. The Uses and requirements of any zone classifications established by this Ordinance.
      ii. The Uses and standards of development set forth in the development plan as approved by the Board of Supervisors.
      iii. Approval of a conditional use permit by the Planning Commission prior to development.

iv. Approval of a tentative subdivision or parcel map.

3. The development plan and any amendment thereto shall include the following:

   i. The type and design of Buildings or Structures and the number of Dwelling Units per gross acre proposed for each residential area.

   ii. A statement of the standards of population density for the various proposed residential land uses.

   iii. The general location of school sites, recreational areas, and other public and semi-public sites and the approximate area of each.

   iv. The general location of all major, primary, secondary and local collector Streets coordinated with the Circulation Element of the County Comprehensive Plan.

4. The development plan and any amendment thereto shall be accompanied by the following:

   i. A general land use map setting forth the proposed Uses of all sections or areas within the subject property and the approximate acreage of each.

   ii. An accompanying text setting forth the land use regulations which constitute the standards of development designed to govern those sections or areas specified in the development plan. Such standards shall contain definitions and information concerning requirements for Building Lot-Coverage, Structure Heights, Building Setbacks, off-street parking, vehicular Access, signing, lighting, storage, screening and Landscaping, and any other information which the Director of Community Development shall require to insure substantial compliance with the purpose of the PC Zone.

   iii. A topographic map and conceptual grading plan of the property.

   iv. A preliminary report and overall plan describing proposed provisions for storm drainage, sewage disposal, water supply and such other public improvements and utilities as the County Engineer may require.

   v. A written statement of standards as they relate to the allocation of land within the development plan to all proposed types of land uses.

   vi. Such other information as may be required by the Director of Community Development to enable a complete analysis and appraisal of the planned development.

3. Adoption of Development Plan--PC Zone

The development plan and supporting statements and documents submitted with the application for a planned community shall be approved and adopted by the Board of Supervisors and included in the Ordinance establishing the PC Zone. All development within the PC Zone shall comply with the development plan as approved and adopted by the Board of Supervisors.

4. Amendments to the Development Plan--PC Zone

Any amendments to the development plans shall be accomplished in the same manner as an amendment to the Zoning Regulations as prescribed in Section 30.4.

Section 2.11.A: Purposes

1. In addition to the objectives prescribed in Section 1.1: Purpose and Scope, the **PS--Public and Semi-Public Zone** is included in the zoning regulations to achieve the following purposes:

    a. Permit adequate identification of areas reserved and developed for public uses other than street Rights-of-Way.

    b. To provide for expansion of their operations or change in Use and to identify and preserve areas of historic and community significance for the enjoyment of future generations.

Section 2.11.B: Permitted and Conditional Uses--PS Zone:

1. The following Uses shall be permitted where the symbol "P" appears and shall be permitted Uses subject to a Conditional Use permit where the symbol "C" appears opposite the Use. All Uses not listed are prohibited. For Uses similar to those listed, see Section 30.1.

AGRICULTURAL USES		PS Zone
1.	Agriculture and ~~Gardening~~ **Animal Keeping subject to the provisions of Section**	P
2.	Feedlots	C

PUBLIC AND SEMI-PUBLIC USES		PS Zone
3.	Animal shelters	C
4.	Cemeteries, human and animal	C
5.	Educational Institutions, public or private	C
6.	Fairgrounds and Accessory Uses and entertainment	C
7.	Fire Stations	C
8.	Flood control facilities	C
9.	Historical landmarks	P
10.	Horse race tracks	C
11.	Hospitals	C
12.	Maintenance yards operated by a public agency	C
13.	Public buildings and grounds	C
14.	Public or private parks, golf courses, golf driving ranges, zoos, aquatic facilities, and other recreation facilities	C
15.	Riding academies or commercial stable	C
16.	Utility Installations	C

Public and Semi-Public Uses		PS Zone
17.	Wireless Telecommunications Facilities subject to the provisions of Section 24.6	C

Accessory Uses		PS Zone
18.	Accessory Structures incidental to permitted or conditional uses.	P
19.	Commercial uses incidental, accessory to or in conjunction with the above permitted or conditional uses.	P
20.	Accessory Wind Energy Systems subject to the provisions of Section 24.9	P

Section 2.11.C: Property Development Standards~~--PS Zone~~

The following requirements are minimums unless otherwise noted:

Property Development Standards		PS Zone
1.	Minimum parcel size	One acre
2.	Lot Width	160 feet
3.	Lot Depth	160 feet
4.	Front Setback	30 feet
5.	Side Setback	25 feet
6.	Rear Setback	25 feet
7.	Lot Coverage, maximum	40%
8.	Structure Height, maximum	35 feet
9.	Distance between Structures	10 feet

Section 2.11.D: Performance Standards

1. ~~Off-Street~~ Parking

   Off-street parking facilities shall be provided for each Use as prescribed in Section 25: Off-Street Parking or as specified in a Conditional Use permit.

2. Screening and Landscaping

   Screening and Landscaping for a Conditional Use shall be specified in the use permit.

3. **Lighting**

   No Outdoor lighting shall be permitted in the PS Zone except as permitted in Section

4. Signs

   No Sign, or outdoor Advertising Device, or display of any character shall be permitted except as prescribed in Section 26: Signs or as authorized in a Conditional Use permit

5. **Projections into Required Yards**

Required Yards and separations shall be maintained free of above ground Structures except as provided in Section

Section 2.12.A: Purposes

In addition to the objectives outlined in Section 1.1: Purpose and Scope, the **OS - Open Space and Conservation Zone** is included in the zoning regulations to achieve the following purposes:

a. To reserve areas of the County where it is desirable and necessary to provide permanent open spaces when such are necessary to safeguard the public health, safety and general welfare and to provide for the location and preservation of scenic areas and recreation areas.

b. This zone classification is intended to be applied primarily to lands held under public ownership.

Section 2.12.B: Permitted and Conditional Uses~~- OS Zone~~

The following Uses shall be permitted where the symbol "P" appears and shall be permitted Uses subject to a Conditional Use permit where the symbol "C" appears opposite the Use. All Uses not listed are prohibited. For Uses similar to those listed, see Section 30.1.

AGRICULTURAL USES		OS Zone
1.	Agriculture and ~~Gardening~~ **Animal Keeping subject to the provisions of Section**	P
2.	Sale of products raised on the premises	C
3.	~~The non-commercial keeping of horses and other Livestock not including chickens, rabbits or common household pets subject to the following conditions:~~ ~~a. A minimum of one (1) acre of land shall be required for the maintenance of such animals.~~ ~~b. Three such animals may be maintained on the first acre and up toone additional animal for each additional one half acre.~~ ~~c. No such animal may be sheltered, fed, or watered closer than 100 feet to a residence occupied by other persons.~~ ~~d. The keeping of all animals shall be subject to the regulations and conditions of the Coconino County Health District and Animal Management Division.~~	~~P~~

PUBLIC AND SEMI-PUBLIC USES		OS Zone
4.	Cemeteries, crematories, columbariums and related facilities	C
5.	Flood control facilities	C
6.	Forestry products and the removal thereof; not including processing plants or lumber mills	P
7.	Historical landmarks	P

Public and Semi-Public Uses		OS Zone
8.	Public or private parks, golf courses, golf driving ranges, zoos, aquatic facilities and other outdoor recreation facilities	C
9.	Public or private non-commercial campgrounds and picnic areas	P
10.	Utility Installation and facilities	C
11.	Wireless Telecommunications Facilities subject to the provisions of Section 24.6	C

Accessory Uses		OS Zone
12.	Accessory Structures incidental to permitted or Conditional Use	P

1. ~~Off-Street~~ Parking

   Off-street parking facilities shall be provided for each Use as prescribed in Section 25: Off-Street Parking or as specified in a Conditional Use permit.

2. Screening and Landscaping

   Screening and Landscaping requirements for a Conditional Use shall be specified in the use permit.

3. **Lighting**

   No Outdoor lighting shall be permitted in the PS Zone except as permitted in Section

4. Signs

   No Sign, or outdoor Advertising Device or display of any character shall be permitted except as prescribed in Section 26: Signs or as authorized in a Conditional Use permit.

5. **Projections into Required Yards**

   Required Yards and separations shall be maintained free of above ground Structures except as provided in Section

Section 2.13.A: Purposes

In addition to the objectives outlined in Section 1.1: Purpose and Scope, the **P - Parking Zone** is included in the zoning regulations to achieve the following purposes:

To provide and identify areas reserved and developed exclusively for public or private off-street parking areas and to accommodate the establishment of parking districts which provide an alternate means of meeting the off-street parking requirements for multiple businesses in a defined area.

Section 2.13.B: Permitted and Conditional Uses--P Zone

The following Uses shall be permitted where the symbol "P" appears and shall be permitted Uses subject to the granting of a Conditional Use permit where the symbol "C" appears opposite the Use. All Uses not listed are prohibited. For Uses similar to those listed, see Section 30.1.

AGRICULTURE AND RELATED USES		**P Zone**
1.	Agriculture and Animal Keeping subject to the provisions of Section	P

PARKING USES		P Zone
2.	Public or private open parking lots including incidental control gates, pay boxes or guard sheds	P
3.	Public or private Garages or other parking structures including incidental appurtenances	C

PUBLIC AND SEMI PUBLIC USES		P Zone
4.	Wireless Telecommunication Facilities subject to the provisions of Section 24.6	P

ACCESSORY USES		P Zone
5.	Accessory Structures located on the same site as a permitted Use	P
6.	Accessory Uses and Structures located on the same site as a Conditional Use	C

Section 2.13.C: Property Development Standards--P Zone

1. A minimum 10 foot wide Front and Street Side Setback shall be required in the P-Parking Zone. Said Setback areas shall be landscaped except for necessary walks and drives per Section 28.
2. A parking Garage or Structure shall maintain a minimum Setback of five feet from any property in a non-commercial or industrial zone.
3. The design and configuration of the parking Garage or Structure shall comply with the Site development standards prescribed in Section 25.3 or as specified in the Conditional

Use permit.

Section 2.13.D: Performance Standards--P Zone

1. **Parking**

   The design and configuration of the parking lot shall comply with the site development standards prescribed in Section 25.3.

2. **Screening and Landscaping**

   a. Wherever off-street parking lots Abut property in any non-commercial or industrial zone, a masonry wall six feet in height as measured from the highest adjacent Grade and screen Landscaping shall be erected and maintained between the parking lot and said zones.

   b. Wherever off-street parking lots are situated across the street from property in any non-commercial or industrial zone, a masonry wall or berm three feet in height shall be erected and maintained between the parking lot and the required Front Yard Setback.

   c. All required Landscaping shall consist predominantly of living plant materials and shall be permanently maintained in a neat and orderly condition.

3. **Lighting**

   No Outdoor lighting shall be permitted in the PS Zone except as permitted in Section

4. Signs

   No Sign, outdoor Advertising Device or display of any character shall be permitted except as prescribed in Section 26: Signs or as authorized under a Conditional Use permit.

5. **Projections into Required Yards**

   Required Yards and separations shall be maintained free of above ground Structures except as provided in Section

Section 2.14.A: Purposes

In addition to the objectives outlined in Section 1.1: Purpose and Scope, the **MR - Mineral Resource Zone** is included in the zoning regulations to achieve the following purposes:

To provide areas of the County where it is desirable and necessary to provide for the extraction of minerals and other natural resources.

Section 2.14.B: Permitted and Conditional Uses--~~MR Zone~~

The following Uses shall be permitted where the symbol "P" appears and shall be permitted Uses subject to the granting of a Conditional Use permit where the symbol "C" appears opposite the Use. All Uses not listed are prohibited. For Uses similar to those listed, see Section 30.1.

AGRICULTURAL USES		MR Zone
1.	Agriculture and ~~Gardening~~ **Animal Keeping subject to the provisions of Section**	P
2.	~~Sale of products raised on the premises~~	~~P~~
3.	~~The non-commercial keeping of horses and other Livestock not including chickens, rabbits or common household pets subject to the following conditions:~~ ~~a. A minimum of one (1) acre of land shall be required for the maintenance of such animals.~~ ~~b. Three such animals may be maintained on the first acre and up to one additional animal for each additional one half acre.~~ ~~c. No such animal may be sheltered, fed, or watered closer than 100 feet to a residence occupied by other persons.~~ ~~d. The keeping of all animals shall be subject to the regulations and conditions of the Coconino County Health District and Animal Management Division.~~	~~P~~
4.	Feedlots	C
5.	Agricultural experimental facilities	P

PUBLIC AND SEMI-PUBLIC USES		MR Zone
6.	Concrete batching plants	C
7.	Excavation, processing and stockpiling of minerals and the back-filling or resultant excavations with inert materials	C
8.	Flood control facilities	C
9.	Manufacture of block, brick, pipe, tile, cement or asphalt	C
10.	Public or private parks, golf courses, golf driving ranges, and other similar open recreational facilities	P

Public and Semi-Public Uses		MR Zone
11.	Rock crushing plants, aggregate washing, screening and drying facilities and equipment.	C
12.	Utility Installations	C
13.	Wireless Telecommunications Facilities subject to the provisions of Section 24.6	C

Accessory Uses		MR Zone
14.	Offices and maintenance Buildings or Structures	P
15.	Residence~~s~~ (including use of a manufactured home) for caretakers	P
16.	Retail or wholesale commercial operations incidental or accessory to or in conjunction with permitted or Conditional Uses	P
17.	Storage of materials or machinery used in conjunction with permitted or Conditional Uses	P
18.	Weigh stations	P

Section 2.14.C: Property Development Standards

1. When a MR Zone Abuts or is situated across the Street from property in any non-commercial or industrial zone, a minimum Building Setback of 100 feet shall be required from such residential zone; provided, however, that the 20 feet of said Setback nearest the Street or zone boundary line shall be landscaped and the remainder may be used for off-street parking purposes as provided in Section 25. A three foot high wall, fence or berm shall be constructed in back of the landscaped area along Street Side Setbacks; along all other Lot Lines adjacent to any non-commercial or industrial zone, a six foot high wall or fence as measured from the highest adjacent Grade and screen Landscaping shall be erected and maintained.
2. Additional property development standards such as, Setbacks, Lot Coverage requirements, height restrictions, screening and landscape requirements may be imposed by the Commission or Board in their approval of a Conditional Use permit.

Section 2.14.D: Performance Standards

1. ~~Off-Street~~ Parking

   Off-street parking facilities shall be provided for each Use as prescribed in Section 25: Off-Street Parking or as specified in a conditional use permit.

2. **Screening and Landscaping**

   a. All mechanical equipment, including heating and air conditioning units, and trash receptacle areas shall be completely screened from surrounding properties by use of a wall or fence or shall be enclosed within a Building.

   b. Outdoor Storage Areas shall be entirely fenced with a rigid, opaque material not less than six feet in height. Those areas visible from a public Street shall be adequately screened by masonry walls or a substitute acceptable to the Director of Community Development.

3. **Lighting**

   No Outdoor lighting shall be permitted in the PS Zone except as permitted in Section

4. Signs

   No Sign or outdoor Advertising Device shall be permitted in a MR except as provided in Section 26: Signs.

5. **Projections into Required Yards**

   Required Yards and separations shall be maintained free of above ground Structures except as provided in Section

6. **Other Performance Standards**

   a. All solid waste which is not disposed on-site shall be transported to a County landfill site for proper disposition.

   b. Trash receptacles enclosed with solid masonry walls and with gates shall be provided for each industrial Use. Said receptacles shall be set back a minimum of 20 feet from any non-commercial or industrial zone boundary and shall be maintained in a neat and sanitary condition in order to safeguard the health, safety and general welfare of adjacent properties, subject to the approval of the Director of Community Development.

   c. No Use except a temporary construction operation shall be permitted which creates changes in temperature or direct glare, detectable by the human senses without the aid of instruments, beyond the boundaries of the site. No Use shall be permitted which creates electrical disturbances that affect the operation of any equipment beyond the boundaries of the site.

   d. All storage of and activities involving inflammable and explosive materials shall be provided with adequate safety and fire fighting devices to the specifications of the State Fire Marshal. All incineration is prohibited.

   e. No Use shall be permitted which creates annoying odor in such quantities as to be readily detectable beyond the boundaries of the Site.

   f. No Use except a temporary construction operation shall be permitted which generates inherent and recurrent ground vibration perceptible, without instruments, at the boundary of the Lot in which the Use is located.

   g. Noise shall not be generated by any Use to the point of disturbing the peace and comfort of neighboring residences.

   h. Any pit resulting from depletion of the mineral resource, or from abandoned or terminated mineral extraction operations shall be filled to ground level and such pits or any depleted hillside areas shall be treated in accordance with the following standards:

      1. On property where the mineral resource thereon is in fact depleted by reason of extraction operations, or on property where the production of

any such resource is in fact abandoned or terminated, said property shall be filled and landscaped to conform with the surrounding properties. A noxious weed abatement plan shall be included. Said filling and Landscaping treatment shall be commenced within one month from the date of depletion, abandonment or termination of mineral resource production on the property and diligently prosecuted to the completion thereof.

2. Slopes, overburden stockpiles, abandoned spoil piles and the general premises shall be graded and smoothed so as to control erosion, prevent the creation of potentially dangerous areas and present a neat and orderly appearance. No hillside shall remain with an average Grade steeper than one foot horizontal to one foot vertical with a 10 foot wide terrace for not more than each 50 feet of vertical height, unless a permanent steeper slope, without terraces, is approved by the County Engineer.

3. Upon termination of operations, all excavations made to a level below the existing ground water table shall be filled with inert materials as approved by the County Engineer to a level above the existing ground water table. This requirement shall not apply, however, to any water-filled excavations scheduled to be in an integral part of future development of the property. All such water-filled areas remaining shall be treated with effective mosquito control measures, as required by the County Health Department.

i. No hazardous material shall be disposed on the premises. All such materials shall be transported to a landfill site officially designated by the State of Arizona for hazardous materials disposal. Only non-hazardous materials produced on the premises may be disposed of on the premises, provided that such disposal be contained in a manner so as to prevent entry of such materials into the surface water system.

Section 2.14.E: Administrative Requirements

Whenever there is a question of conformance with the performance standards of this Section, the Director of Community Development shall require the property owner or operator to engage the services of a certified testing firm. Copies of all such tests shall be furnished to the Director.

OVERLAY ZONES

SECTION 2.15: OVERLAY ZONES

Section 2.15.A: Purposes

Because of their special or unique characteristics and the need to implement specific sections of the Comprehensive Plan, the following Overlay Zones are established:

SECTION		ZONE	PAGE
23.2	FPM	Floodplain Management Overlay	23-2
23.3	DRO	Design Review Overlay	23-29

Section 2.15.B: FPM--Floodplain Management Overlay Zone

1. Statutory Authorization, Findings of Fact, Purpose and Methods

   a. Statutory Authorization: The Legislature of the State of Arizona has in ARS § 48-3601 through 48-3628 delegated the responsibility to each County Flood Control District to adopt regulations designed to promote the public health, safety, and general welfare of its citizenry. Therefore, the Board of Directors of the Flood Control District of Coconino County, Arizona, do ordain as follows:

   b. Findings of Fact:

      1. The Flood hazard areas of Coconino County are subject to periodic inundation which results in loss of life and property, health and safety hazards, disruption of commerce and governmental services, extraordinary public expenditures for Flood protection and relief, and impairment of the tax base, all of which adversely affect the public health, safety and general welfare.

      2. These Flood losses are caused by the cumulative effect of obstructions in Special Flood Hazard Areas which increase Flood heights and velocities, and when inadequately anchored, cause damage in other areas. Uses that are inadequately Flood proofed, elevated or otherwise protected from Flood damage also contribute to the Flood loss.

   c. Statement of Purpose: It is the purpose of this Ordinance to promote the public health, safety, and general welfare, and to minimize public and private losses due to Flood conditions in specific areas by provisions designed:

      1. To protect human life and health;

      2. To minimize expenditure of public money for costly Flood control projects;

      3. To minimize the need for rescue and relief efforts associated with Flooding and generally undertaken at the expense of the general public;

      4. To minimize prolonged business interruptions;

      5. To minimize damage to public facilities and utilities such as water and gas mains, electric, telephone and sewer lines, Streets and bridges located in Special Flood Hazard Areas;

      6. To help maintain a stable tax base by providing for the sound use and development of Special Flood Hazard Areas so as to minimize future Flood

blight areas;

7. To insure that potential buyers are notified that property is in a Special Flood Hazard Area;
8. To insure that those who occupy the Special Flood Hazard Areas assume responsibility for their actions; and
9. To maintain eligibility for disaster relief.

d. Methods of Reducing Flood Losses: In order to accomplish its purposes, this Ordinance includes methods and provisions for:

1. Restricting and prohibiting Uses which are dangerous to health, safety, and property due to water or Erosion hazards, or which result in damaging increases in Erosion or in Flood heights or velocities;
2. Requiring that Uses vulnerable to Floods, including facilities which serve such Uses, be protected against Flood damage at the time of initial construction;
3. Controlling the alteration of natural Floodplains, stream channels, and natural protective barriers, which help accommodate or channel Flood waters;
4. Controlling filling, grading, dredging, and other development which may increase Flood damage; and;
5. Preventing or regulating the construction of Flood barriers which will unnaturally divert Flood waters or which may increase Flood hazards in other areas.

2. General Provisions--FPM Zone

a. Lands to Which This Ordinance Applies: This ordinance shall apply to all Special Flood Hazard Areas within the boundaries of Coconino County except those incorporated cities and town which have adopted a resolution in accordance with ARS § 48-3610.

b. Basis for Establishing the Special Flood Hazard Areas: The Special Flood Hazard Areas identified by the Federal Insurance Administration (FIA) of the Federal Emergency Management Agency (FEMA) in a scientific and engineering report entitled "The Flood Insurance Study (FIS) for Coconino County, dated September 3, 2010 with accompanying Flood Insurance Rate Maps (FIRMs), dated September 3, 2010 and all subsequent amendments and/or revisions, are hereby adopted by reference and declared to be a part of this Ordinance. This Flood Insurance Study and attendant mapping is the minimum area of applicability of this Ordinance and may be supplemented by studies for other areas which allow implementation of this Ordinance and which are recommended to the Floodplain Board by the Floodplain Administrator. The Board, within its area of jurisdiction shall delineate (or may by rule require developers of land to delineate) for areas where development is ongoing or imminent, and thereafter as development becomes imminent, Floodplains consistent with the criteria developed by the Federal Emergency Management Agency and the Director of Water Resources. The FIS and FIRMs are on file

at the Department of Community Development, 2500 N. Fort Valley Road, Flagstaff.

c. Compliance: All development of land, construction of residential, commercial or industrial Structures or future development, or Uses of any kind conducted on land areas located within the Floodplain Management Overlay Zone shall be accomplished in complete conformance with the provisions of this Section and other applicable regulations. Proposed actions which may divert, retard or obstruct Flood waters or in any way threaten public health, safety or the general welfare must first be reviewed and approved by the County Engineer and may be initiated only after a finding has been made that serious detrimental impacts will not occur.

d. Abrogation and Greater Restrictions: This Ordinance is not intended to repeal, abrogate, or impair any existing Easements, covenants, or deed restrictions. However, where this Ordinance and another ordinance, Easement, covenant, or deed restriction conflict or overlap, whichever imposes the more stringent restrictions shall prevail.

e. Interpretation: In the interpretation and application of this Ordinance, all provisions shall be:

    1. Considered as minimum requirements;
    2. Liberally construed in favor of the governing body; and,
    3. Deemed neither to limit nor repeal any other powers granted under state statutes.

f. Warning and Disclaimer of Liability: The degree of Flood Protection required by this Ordinance is considered reasonable for regulatory purposes and is based on scientific and engineering considerations. Larger Floods can and will occur on rare occasions. Flood heights may be increased by human-made or natural causes. This Ordinance does not imply that land outside the Special Flood Hazard Areas or Uses permitted within such areas will be free from Flooding or Flood damages. This Ordinance shall not create liability on the part of Coconino County, any officer or employee thereof, the State of Arizona, the Federal Insurance Administration, or the Federal Emergency Management Agency, for any Flood damages that result from reliance on this Ordinance or any administrative decision lawfully made thereunder.

g. Statutory Exemptions:

    1. In accordance with ARS § 48-3609.H, regulations herein adopted for the FPM Overlay Zone shall not affect:

        i. Existing legal Uses of property or the right to continuation of such legal Uses. However, if a nonconforming Use of land, Building or Structure is discontinued for 12 months or destroyed to the extent of 50 percent of its value, as determined by a competent appraiser, any further Use shall comply with this Ordinance and regulations of Coconino County.

ii. Reasonable repair or alteration of property for the purposes for which the property was legally used on May 6, 1978, or the effective date of any regulations affecting such property, except that any alteration, addition or repair to a nonconforming Building or Structure which would result in increasing its Flood damage potential by fifty per cent or more shall be either Floodproofed or elevated to or above the regulatory Base Flood Elevation.

iii. Reasonable repair of Structures constructed with the written authorization required by ARS §48-3613.

iv. Facilities constructed or installed pursuant to a certificate of environmental compatibility issued pursuant to Title 40, Chapter 2, Article 6.2.

2. In accordance with ARS § 48-3613, written authorization shall not be required, nor shall the Floodplain Board prohibit:

i. The construction of bridges, culverts, dikes and other Structures necessary to the construction of public highways, Roads and Streets intersecting or crossing a Watercourse.

ii. The construction of storage dams for watering Livestock or wildlife, Structures on banks of a Watercourse to prevent Erosion of or damage to adjoining land if the Structure will not divert, retard or obstruct the natural channel of the Watercourse, or dams for the conservation of Flood waters as permitted by ARS Title 45, Chapter 6.

iii. Construction of tailing dams and waste disposal areas for use in connection with mining and metallurgical operations. This paragraph does not exempt those sand and gravel operations which will divert, retard or obstruct the flow of waters in any Watercourse from complying with and acquiring authorization from the Board pursuant to regulations adopted by the Board under this Section.

iv. Other construction if it is determined by the Board that written authorization is unnecessary.

v. Any Flood control district, county, city, town, or other political subdivision, from exercising powers granted to it under Title 48, Chapter 21, Article 1.

vi. The construction of streams, waterways, lakes and other auxiliary facilities in conjunction with development of public parks and Recreation Facilities by a public agency or political subdivision.

vii. The construction and erection of poles, towers, foundations, support Structures, guy wires, and other facilities related to power transmission as constructed by any utility whether a public service corporation or a political subdivision.

3. Before any construction authorized by subsection 23.1-3.G.2 of this Section may begin, the responsible person must submit plans for the construction to the Floodplain Board for review and comment.

4. In addition to other penalties or remedies otherwise provided by law, this State, a political subdivision or a person who may be damaged or has been damaged as a result of the unauthorized diversion, retardation or obstruction of a watercourse has the right to commence, maintain and prosecute any appropriate action or pursue any remedy to enjoin, abate or otherwise prevent any person from violating or continuing to violate this Section or regulations adopted pursuant to ARS Title 45, Chapter 10. If a person is found to be in violation of this section, the court shall require the violator to either comply with this section if authorized by the board or remove the obstruction and restore the watercourse to its original state. The court may also award such monetary damages as are appropriate to the injured parties resulting from the violation including reasonable costs and attorney fees.

h. Declaration of Public Nuisance:

Every new Structure, Building, fill, excavation or development located or maintained within any Special Flood Hazard Area after August 8, 1973 in violation of this Ordinance is a public nuisance per se and may be abated, prevented or restrained by action of this political subdivision.

i. Abatement of Violations:

Within 30 days of discovery of a Violation of this Ordinance, the Floodplain Administrator shall submit a report to the Floodplain Board which shall include all information available to the Floodplain Administrator which is pertinent to said Violation. Within 30 days of receipt of this report, the Floodplain Board shall either:

i. Take any necessary action to effect the abatement of such Violation; or

ii. Issue a Variance to this Ordinance in accordance with the provisions of Section 23.1-8 herein; or

iii. Order the owner of the property upon which the Violation exists to provide whatever additional information may be required for their determination. Such information must be provided to the Floodplain Administrator within 30 days of such order, and they shall submit an amended report to the Floodplain Board within 20 days. At their next regularly scheduled public meeting, the Floodplain Board shall either order the abatement of said Violation or they shall grant a Variance in accordance with the provisions herein established; or

iv. Submit to the Administrator of the Federal Insurance Administration a declaration for denial of insurance, stating that the property is in Violation of a cited State or local law, regulation or ordinance, pursuant to Section 1316 of the National Flood Insurance Act of 1968 as amended.

j. Unlawful Acts

1. It is unlawful for any person to engage in any development or to divert, retard or obstruct the flow of waters in any Watercourse whenever

it creates a hazard to life or property without securing the written authorization of the Floodplain Board per ARS 48-3613. Where the Watercourse is a delineated Floodplain, it is unlawful to excavate or build any Structure affecting the flow of waters without securing written authorization of the Floodplain Board.

2. Any person found guilty of violating any provision of this Ordinance shall be guilty of a misdemeanor. Each day that a Violation continues shall be a separate offense punishable as hereinabove described.

k. Severability:

1. These Floodplain Management Regulations and the various parts thereof are hereby declared to be severable. Should any Section of this Ordinance be declared by the courts to be unconstitutional or invalid, such decision shall not affect the validity of the Ordinance as whole, or any portion thereof other than the Section so declared to be unconstitutional or invalid.

3. Permitted and Conditional Uses--FPM Zone

Within the Floodplain Overlay Zone, the following Uses shall be permitted where the symbol "P" appears and shall be permitted subject to the granting of a Conditional Use permit where the symbol "C" appears unless otherwise prohibited by the underlying Zoning District:

Agricultural Uses		FPM Zone
1.	Agriculture ~~Gardening~~ **Animal Keeping subject to the provisions of Section and further limited below**	P
3.	Agricultural experimental facilities	P
4.	Agricultural Uses wherein a building or structure is proposed within a Floodplain	C
5.	Agricultural Uses conducted for commercial purposes on parcels of less than 5 acres	C

Other Uses		FPM Zone
6.	Flood Control Facilities (subject to the conditions as outlined in Section 23.1-3.C)	P
7.	Dredging and filling subject to the approval of the County Engineer. On federal designated waterways, such operations also shall be subject to the approval of the Army Corps of Engineers	P
8.	Parking Lots	P
9.	Parks and outdoor Recreational Facilities	P
10.	All other Uses permitted in the underlying zone with which the FPM Zone is combined except that Single Family Residences in the G, AR, RR and RS Zones shall be permitted subject to compliance with these regulations	C

4. Administration

a. Establishment of Floodplain Permit: A Floodplain Permit shall be obtained

before, grading or placing fill, installation of utilities, construction or development, including the installation of wastewater systems and the placement of Manufactured Homes, begins within any Special Flood Hazard Areas established in Section 23.1-3.B. Application for a Floodplain Permit **shall follow Administrative Permit requirements and procedures and in addition** shall be made on forms furnished by the Floodplain Administrator and may include, but not be limited to:

1. A completed Coconino County Floodplain Permit application form including engineer or surveyor information, assessor's parcel number, identification of possible flood hazards, and identification of methods of construction.
2. Three copies of a scaled site plan drawn to standard engineer scale showing the nature, location, dimensions, and elevation of the area in question; north arrow, means of access, easements, topography, watercourses, walls or fences, wastewater systems, utilities and existing or proposed Structures, fill, storage of materials, and drainage facilities; and the location of the foregoing. Specifically, the following information is required:
    i. Proposed elevation and method of elevation in relation to mean sea level, of the lowest floor (including Basement) of all Structures provided by a Certified Professional Engineer or Registered Land Surveyor; in Zone AO, elevation of existing highest adjacent natural grade and proposed elevation of lowest floor of all Structures;
    ii. Proposed elevation in relation to mean sea level to which any non-residential Structure will be Floodproofed;
    iii. Certification by a registered professional engineer or architect that the Floodproofing methods for any nonresidential Structure meet the Floodproofing criteria in Section 23.1-6.A.3.c; and
    iv. Description of the extent to which any Watercourse will be altered or relocated as a result of proposed development.
    v. Base Flood Elevation data for subdivision proposals or other development greater than 50 lots or 5 acres.

b. Designation of the Floodplain Administrator: The Director of the Department of Community Development is hereby appointed to administer, implement, and enforce this Ordinance by granting or denying Development Permits in accordance with its provisions

c. Duties and Responsibilities of the Floodplain Administrator: Duties of the Floodplain Administrator shall include, but not be limited to:
    1. Review all Development Permits to determine that:
        i. The permit requirements of this Ordinance have been satisfied;
        ii. All other required state and federal permits have been obtained;
        iii. The site is reasonably safe from Flooding;

iv. The proposed development does not adversely affect the carrying capacity of areas where Base Flood Elevations have been determined but a Floodway has not been designated. For purposes of this Ordinance, "adversely affects" means that the cumulative effect of the proposed development when combined with all other existing and anticipated development, will increase the Water Surface Elevation of the Base Flood more than one foot at any point.

2. Substantial Improvement and Substantial Damage Procedure. Using FEMA publication FEMA 213, "Answers to Questions about Substantially Damaged Buildings," develop detailed procedures for identifying and administering requirements for Substantial Improvement and Substantial Damage, to include defining "Market Value." Assure procedures are coordinated with other departments and divisions and implemented by community staff.

3. Use of Other Base Flood Data. When Base Flood Elevation data has not been provided in accordance with Section 23.1-3.B, for example in A Zones for which detailed studies have not been done, or areas subject to Flooding which have not been designated by FEMA on FIRM's, the Floodplain Administrator shall obtain, review, and reasonably utilize any Base Flood Elevation data available from a federal, state or other source, in order to administer Section 23.1-6. The Floodplain Administrator may require that a hydrologic study which determines Base Flood Elevation be prepared by a Professional Engineer and be submitted by the property owner prior to the submission of a development or Building Permit application. Any such information shall be consistent with the requirements of the Federal Emergency Management Agency and the Director of Water Resources and shall be submitted to the Floodplain Board for adoption.

4. Obtain and maintain for public inspection and make available as needed for Flood Insurance Policies or effecting Increased Cost of Construction Coverage for Repetitive Loss Structures:

   i. The certified Regulatory Flood Elevation required in Section 23.1-6.A.3.a;

   ii. The Floodproofing certification required in Section 23.1-6.A.3.c.i;

   iii. The Flood vent certification required in Section 23.1-6.A.3.d; and

   iv. The elevation certification required for additional development standards, including Subdivisions, in Section 23.1-6.D.

   v. The Floodway encroachment certification required in Section 23.1-6.G.

   vi. Maintain a record of all Variance actions, including justification for their issuance, and report such Variances issued in it biennial report submitted to the Federal Emergency Management Agency.

   vii. Obtain and maintain improvement calculations.

5. Whenever a Watercourse is to be altered or relocated:

   i. Notify adjacent communities and the Arizona Department of Water

Resources prior to such alteration or relocation of a Watercourse, and submit evidence of such notification to the Federal Insurance Administration through appropriate notification means;

ii. Require that the Flood carrying capacity of the altered or relocated portion of said Watercourse is maintained.

iii. Prior to the alteration of any Watercourse the County Engineer shall review and revise as necessary all plans for proposed stream modifications.

6. Base Flood Elevation and rate of flow due to physical alterations:

   i. Base Flood Elevations may increase or decrease resulting from physical changes affecting Flooding conditions. As soon as practicable, but not later than six months after the date such information becomes available, the Floodplain Administrator shall notify the Federal Emergency Management Agency of the changes by submitting technical or scientific data in accordance with Volume 44 Code of Federal Regulations section 65.3. Such a submission is necessary so that upon confirmation of those physical changes affecting Flooding conditions, risk premium rates and Floodplain Management Requirements with be based upon current data.

   ii. Within one hundred twenty days after completion of construction of any Flood control protective works which change the rate of flow during the Flood or the configuration of the Floodplain upstream or downstream from or adjacent to the project, the person or agency responsible for installation of the project shall provide to the governing bodies of all jurisdictions affected by the project a new delineation of all Floodplains affected by the project. The new delineation shall be done according to the criteria adopted by the Director of Water Resources.

7. Advise in writing and provide a copy of any development plan, to any city or town which has assumed jurisdiction over its Floodplains in accordance with ARS § 48-3610, of any application for a Floodplain use permit or Variance to develop land in a Floodplain or Floodway within one mile of the corporate limits of such city or town. The District shall also advise such city or town in writing and provide a copy of any development plan of any major development proposed within a Floodplain or Floodway which could affect Floodplains, Floodways, or Watercourses within such city's or town's area of jurisdiction. Written notice and a copy of the plan of development shall be sent to such city or town no later than three working days after having been received by the District.

8. Make interpretations where needed, as to the exact location of the boundaries of the Special Flood Hazard Areas (for example, where there appears to be a conflict between a mapped boundary and actual field conditions). The person contesting the location of the boundary shall be given a reasonable opportunity to appeal the interpretation as provided in Section 23.1-8.

9. Take actions on Violations of this Ordinance as required in Section 23.1-3.I herein.

10. Notify the Administrator and Director of Water Resources of acquisition by means of annexation, incorporation, or otherwise, of additional areas of jurisdiction.

5. Provisions for Flood Hazard Reduction

In all Special Flood Hazard Areas the following standards are required:

a. Standards of Construction:

1. Anchoring

i. All New Construction and Substantial Improvements shall be anchored to prevent flotation, collapse, or lateral movement of the Structure resulting from hydrodynamic and hydrostatic loads, including the effects of buoyancy.

ii. All Manufactured Homes shall meet the anchoring standards of Section 23.1-6.E below.

2. Construction Materials and Methods

i. All New Construction and Substantial Improvements shall be constructed with materials and utility equipment resistant to Flood damage.

ii. All New Construction and Substantial Improvements shall be constructed using methods and practices that minimize Flood damage.

iii. All New Construction, Substantial Improvement and other proposed new development shall be constructed with electrical, heating, ventilation, plumbing and air conditioning equipment and other service facilities that are designed and/or located so as to prevent water from entering or accumulating within the components during conditions of Flooding.

iv. Require within Zones AH or AO that adequate drainage paths around Structures on slopes guide Flood waters around and away from proposed or existing Structures.

3. Elevation and Floodproofing

i. New residential Construction and Substantial Improvement of any Structure in Zones AE, AH and A1-30 shall have the lowest floor, including Basement, elevated to or above the Regulatory Flood Elevation. In an A Zone where a BFE has not been determined, any Structure shall be elevated to or above the regulatory flood elevation or be elevated in accordance with the criteria developed by the Director of the Arizona Department of Water Resources. Nonresidential Structures may meet the standards of Section 3.c below. Upon the completion of the Structure the elevation of the lowest floor, including Basement, shall be certified by a registered

professional engineer or registered land surveyor verified by the community building inspector and provided to the Floodplain Administrator.

ii. New residential Construction and Substantial Improvement of any Structure in Zone AO shall have the lowest floor, including Basement, higher than the highest adjacent Grade at least one foot higher than the depth number on the FIRM, or at least two feet if no depth number is specified. Nonresidential Structures may meet the standards in Subsection 23.1-6.A.3.c below. Upon completion of the Structure a registered professional engineer or registered land surveyor shall certify to the Floodplain Administrator that the elevation of the Structure meets this standard verified by the community building inspector.

iii. Nonresidential construction, New or Substantial Improvement, shall either be elevated in conformance with Subsections a or b above or together with attendant utility and sanitary facilities:

a. be Floodproofed so that below the regulatory flood level the Structure is watertight with walls substantially impermeable to the passage of water;

b. have structural components capable of resisting hydrostatic and hydrodynamic loads and effects of buoyancy; and

c. be certified by a registered professional engineer or architect that the standards of this subsection are satisfied. Such certifications shall be provided to the Floodplain Administrator.

iv. Require, for all New Construction and Substantial Improvements, that fully enclosed areas below the lowest floor that are useable solely for parking of vehicles, Building access or storage in an area other than a Basement and which are subject to Flooding shall be designed to automatically equalize hydrostatic Flood forces on exterior walls by allowing for the entry and exit of floodwaters. Designs for meeting this requirement must be certified by either a registered professional engineer or architect to meet or exceed the following minimum criteria:

a. A minimum of two openings on different side of each enclosed area, with a total net area of not less than one square inch for every square foot of enclosed area subject to Flooding shall be provided.

b. The bottom of all openings shall be no higher than one foot above Grade.

c. Openings may be equipped with screens, louvers, valves, or other coverings or devices provided that they permit the automatic entry and exit of Floodwaters.

d. If it is not feasible or desirable to meet the openings criteria stated above, a registered engineer or architect may design and

certify the openings.

v. Manufactured Homes shall meet the above standards and also the standards in Section 23.1-6.E.

vi. A Garage attached to a residential Structure, constructed with the Garage floor slab below the Regulatory Flood Elevation, must be designed to allow for the automatic entry of Flood waters. See Section 23.1-6.3.d. Areas of the Garage below the Regulatory Flood Elevation must be constructed with Flood resistant materials. See Section 23.1-6.2. A Garage attached to a nonresidential Structure must meet the above requirements or be dry Floodproofed.

vii. Detached Accessory Structures used solely for parking (2 car detached Garages or smaller) or limited storage (small, low-cost sheds), as defined in Section 23.1-2, may be constructed such that its floor is below the regulatory flood elevation, provided the structure is designed and constructed in accordance with the following requirements:

a. Use of the Accessory Structure must be limited to parking or limited storage.

b. The portions of the Accessory Structure located below the Regulatory Flood Elevation must be built using Flood-resistant materials.

c. The Accessory Structure must be adequately anchored to prevent floatation, collapse or lateral movement.

d. Any mechanical and utility equipment in the Accessory Structure must be elevated or Floodproofed to or above the Regulatory Flood Elevation.

e. The Accessory Structure must comply with Floodplain encroachment provisions in Section 23.1-6.G.

f. The Accessory Structure must be designed to allow for the automatic entry of Flood waters in accordance with Section 23.1-3.d.

g. Detached Garages and Accessory Structures not meeting the above standards must be constructed in accordance with all applicable standards in Section 23.1-6.

b. Standards for Storage of Materials and Equipment:

1. The storage or processing of materials that are, in time of Flooding, buoyant, flammable, explosive, or could be injurious to human, animal or plant life is prohibited.

2. Storage of other material or equipment may be allowed if not subject to major damage by Floods, and if firmly anchored to prevent flotation, or if readily removable from the area within the time available after Flood warning.

c. Standards for Utilities:

1. All new or replacement water supply and sanitary sewage systems shall be designed to minimize or eliminate infiltration of Flood waters into the system and discharge from systems into Flood waters.
2. On-site waste disposal systems shall be located to avoid impairment to them or contamination from them during Flooding.
3. All new and replacement sanitary sewage systems for development projects in identified Floodplain areas shall meet all requirements of the State and/or County Health Departments and shall be designed to minimize or eliminate infiltration of Flood waters. On-site effluent disposal systems shall not be installed wholly or partially within the designated regulatory Floodway. On-site waste disposal systems shall be located so as to avoid their impairment during Flood conditions as well as to preclude contamination from them during Flooding. Waste disposal systems shall not be installed in a regulatory Floodway.

d. Standards for Subdivisions:

All new Subdivision proposals and other proposed development (including proposals for Manufactured Home Parks and Subdivisions), greater than 50 lots or 5 acres, whichever isthe lesser, shall:

i. Identify the Special Flood Hazard Areas and the elevation of the Base Flood.
ii. Identify on the final plans the elevations(s) of the proposed Structure(s) and pads. If the site is filled above the Base Flood Elevation, the final lowest floor and Grade elevations shall be certified by a registered professional engineer or surveyor and provided to the Floodplain Administrator.
    a. All Subdivision proposals and other proposed development shall be consistent with the need to minimize Flood damage.
    b. All Subdivision proposals and other proposed development shall have public utilities and facilities such as sewer, gas, electrical and water systems located and constructed to minimize Flood damage.
    c. All Subdivision proposals and other proposed development shall provide adequate drainage to reduce exposure to Flood hazards.

e. Standards for Manufactured Homes: All Manufactured Homes that are placed or Substantially Improved shall:

1. Be elevated so that the bottom of the structural frame or the lowest point of any attached appliances, whichever is lower, is at or above the Regulatory Flood Elevation; and
2. Be securely anchored to an adequately anchored foundation system to resist flotation, collapse or lateral movement. Methods of anchoring may include, but are not to be limited to, use of over-the-top or frame ties to ground anchors. This requirement is in addition to applicable State and

Local anchoring requirements for resisting wind forces.

f. Standards for Recreational Vehicles: All Recreational Vehicles placed on site will either:

1. Be on site for fewer than 180 consecutive days, and be fully licensed and ready for highway use. A Recreational Vehicle is ready for highway use if it is on its wheels or jacking system, is attached to the site only by quick disconnect type utilities and security devices, and has no permanently attached additions; or

2. Meet the permit requirements of Section 23.1-5 of this Ordinance and the elevation and anchoring requirements for Manufactured Homes in Section 23.1-6.E (or 23.1-6.A.3.e).

g. Floodways: Located within Special Flood Hazard Areas established in Section 23.1-3.B are areas designated as Floodways. Since the Floodway is an extremely hazardous area due to the velocity of Flood waters which carry debris, potential projectiles, and erosion potential, the following provisions apply:

1. Prohibit encroachments, including fill, New Construction, Substantial Improvements, and other development unless certification by a registered professional engineer or architect is provided demonstrating that encroachments shall not result in any increase in Flood levels during the occurrence of the Base Flood discharge.

2. If Section 23.1-6.G.1 is satisfied, all New Construction and Substantial Improvements shall comply with all other applicable Flood hazard reduction provisions of Section 23.1-6.

h. Flood-related Erosion-prone Areas:

1. The Floodplain Administrator shall require permits for proposed construction and other development within all Flood-Related Erosion-prone areas as known to the community.

2. Permit applications shall be reviewed to determine whether the proposed Site alterations and improvements will be reasonably safe from Flood-Related Erosion and will not cause Flood-Related Erosion hazards or otherwise aggravate the existing hazard.

3. If a proposed development is found to be in the path of Flood-Related Erosion or would increase the Erosion hazard, such improvements shall be relocated or adequate protective measures shall be taken to avoid aggravating the existing Erosion hazard.

4. Within Zone E on the Flood Insurance Rate Map, a Setback is required for all new development from the lake, bay, riverfront or other body of water to create a safety buffer consisting of a natural vegetative or contour strip. This buffer shall be designated according to the Flood-Related Erosion hazard and Erosion rate, in relation to the anticipated “useful life” of Structures, and depending upon the geologic, hydrologic, topographic, and climatic characteristics of the land. The buffer may be used for suitable open space purposes, such as for agricultural, forestry, outdoor recreation

and wildlife habitat areas, and for other activities using temporary and portable Structures only.

6. Property Development Standards--FPM Zone

   a. All performance, development and maintenance standards, including screening and Landscaping, off-street parking and Sign regulations, shall be as set forth in the underlying zone with which the FPM Zone is combined.

   b. Such other performance, development and maintenance standards as may be specified in a conditional use permit required for any use also shall be applicable.

   c. In a Floodplain where no Floodway is identified, all Structures, except as authorized by Section 23.1-3.C, shall be set back five feet from the bank(s) of the Watercourse as determined by the County Engineer.

   d. All development proposals for land areas greater than five acres, wherein at least a portion of the subject property is located in an identified Floodplain area, shall clearly indicate the Base Flood Elevation data as shown on the Flood Insurance Rate Maps (FIRMs).

   e. Flood retarding or protection Structures such as walls or berms may be constructed in identified Floodplain areas if, in the opinion of the County Engineer, such Structures will ensure the protection of properties, Buildings and public safety. Such Structures shall be constructed in accordance with plans and specifications prepared by an engineer registered and licensed to practice in the State of Arizona and as approved by the County Engineer. Such Structures shall not create any detrimental impact or increase Flood hazards on upstream or downstream properties.

7. Variance Procedure

   a. Nature of Variances:

      1. The Variance criteria set forth in this section of the Ordinance are based on the general principle of zoning law that Variances pertain to a piece of property and are not personal in nature. A Variance may be granted for a parcel of property with physical characteristics so unusual that complying with the requirements of this ordinance would create an exceptional hardship to the applicant or the surrounding property owners. The characteristics must be unique to the property and not be shared by adjacent parcels. The unique characteristic must pertain to the land itself, not to the Structure, its inhabitants, or the property owners.

      2. It is the duty of Coconino County to help protect its citizens from Flooding. This need is so compelling and the implications of the cost of insuring a Structure built below the Regulatory Flood Elevation are so serious that Variances from the Flood elevation or from other requirements in the Flood Ordinance are quite rare. The long-term goal of preventing and reducing Flood loss and damage can only be met if Variances are strictly limited. Therefore, the Variance guidelines provided in this ordinance are

more detailed and contain multiple provisions that must by met before a Variance can be properly granted. The criteria are designed to screen out those situations in which alternatives other than a Variance are more appropriate.

3. Variances from the provisions of this Section shall be issued only upon consideration and review of technical documentation, prepared by a registered engineer and acceptable to the Floodplain Administrator showing that the objectives of Flood hazard reduction would not be contradicted by the granting of a Variance and that the Variance is the minimum necessary, considering the Flood hazard, to afford relief.

b. Appeal Board:

1. The following information shall be submitted when applying for a Floodplain Variance:

i. A completed Coconino County Floodplain Variance application form including name and address of the applicant, name of contact person, phone number, fax number and email address, Assessor's Parcel Number, Subdivision/unit/lot, site address/location, zoning, existing land use, lot size, variance request description, and property owner's authorization by their signature.

ii. A typewritten narrative describing the precise nature of the Variance requested.

iii. Seven (7) copies of a site plan drawn to scale using accurate dimensions showing property boundaries and any adjacent property affected.

iv. A list of all owners of property within three hundred fee (300') of the exterior boundaries of the subject property; the list shall be keyed to a map showing the location of these properties.

v. A survey of the property subject to the request may be required based on the specific Variance.

2. The Floodplain Board of Coconino County shall hear and decide appeals and requests for Variances from the requirements of this Ordinance.

3. The Floodplain Board shall hear and decide appeals when it is alleged there is an error in any requirement, decision, or determination made by the Floodplain Administrator in the enforcement or administration of this Ordinance.

4. In passing upon such applications, the Floodplain Board shall consider all technical evaluations, all relevant factors, standards specified in other sections of this Ordinance, and:

i. the danger that materials may be swept onto other lands to the injury of others;

ii. the danger of life and property due to Flooding or Erosion damage;

iii. the susceptibility of the proposed facility and its contents to Flood damage and the effect of such damage on the individual owner;

iv. the importance of services provided by the proposed facility to the community;

v. the necessity to the facility of a waterfront location, where applicable;

vi. the availability of alternative locations for the proposed Use which are not subject to Flooding or Erosion damage;

vii. the compatibility of the proposed Use with existing and anticipated development;

viii. the relationship of the proposed Use to the Comprehensive Plan and Floodplain Management program for that area;

ix. the safety of access to the property in time of Flood for ordinary and emergency vehicles;

x. the expected heights, velocity, duration, rate of rise, and sediment transport of the Flood waters expected at the Site; and,

xi. the costs of providing governmental services during and after Flood conditions, including maintenance and repair of public utilities and facilities such as sewer, gas, electrical, and water system, and Streets and bridges.

5. Upon consideration of the factors of Section 23.1-8.B.4 and the purposes of this Ordinance, the Floodplain Board may attach such conditions to the granting of Variances as it deems necessary to further the purposes of this Ordinance.

6. Any applicant to whom a Variance is granted shall be given written notice over the signature of a County official that:

i. the issuance of a Variance to construct a structure below the Base Flood level will result in increased premium rates for Flood insurance up to amounts as high as $25 for $100 of insurance coverage, and

ii. such construction below the Base Flood level increases risks to life and property.

iii. Such notification shall be maintained with a record of all Variance actions as required in Section 23.1-8.B.7 of this Ordinance. Such notice will also state that the land upon which the Variance is granted shall be ineligible for exchange of land pursuant to any Flood relocation and land exchange program. A copy of the notice shall be recorded by the Floodplain Board in the office of theCoconino County Recorder and shall be recorded in a manner so that it appears in the chain of title of the affected parcel of land.

7. The Floodplain Administrator shall maintain a record of all Variance actions, including justification for their issuance, and report such Variances issued in its biennial report submitted to the Federal Emergency Management Agency.

c. Conditions for Variances:

1. Generally, Variances may be issued for New Construction and Substantial

Improvements to be erected on a Lot of one-half acre or less in size contiguous to and surrounded by Lots with existing Structures constructed below the Base Flood level, providing the procedures of Sections 23.1-5 and 23.1-6 of this Ordinance have been fully considered. As the Lot size increases beyond one-half acre, the technical justification required for issuing the Variance increases.

2. Variances may be issued for the repair, rehabilitation or restoration of Structures listed in the National Register of Historic Places or the State Inventory of Historic Places, upon a determination that the proposed repair or rehabilitation will not preclude the Structure's continued designation as a Historic Structure and the Variance is the minimum necessary to preserve the historic character and design of the Structure.
3. Variances shall not be issued within any designated Floodway if any increase in Flood levels during the Base Flood discharge would result.
4. Variances shall only be issued upon a determination that the Variance is the minimum necessary, considering the Flood hazard, to afford relief.
5. Variances shall only be issued upon:
   i. A showing of good and sufficient cause;
   ii. A determination that failure to grant the Variance would result in exceptional hardship to the applicant;
   iii. A showing that the Use cannot perform its intended purpose unless it is located or carried out in close proximity to water. This includes only facilities defined in Section 23.1-2 of this Ordinance in the definition of "Functionally Dependent Use"; and
   iv. A determination that the granting of a Variance will not result in increased Flood heights, additional threats to public safety, or extraordinary public expense, create nuisances, cause fraud on or victimization of the public, or conflict with existing local laws or ordinances.

d. Variance Review Timeframes

   1. Timeframes shall be subject to the standards for Permits requiring Hearing.

FPM - FLOODPLAIN MANAGEMENT ZONE

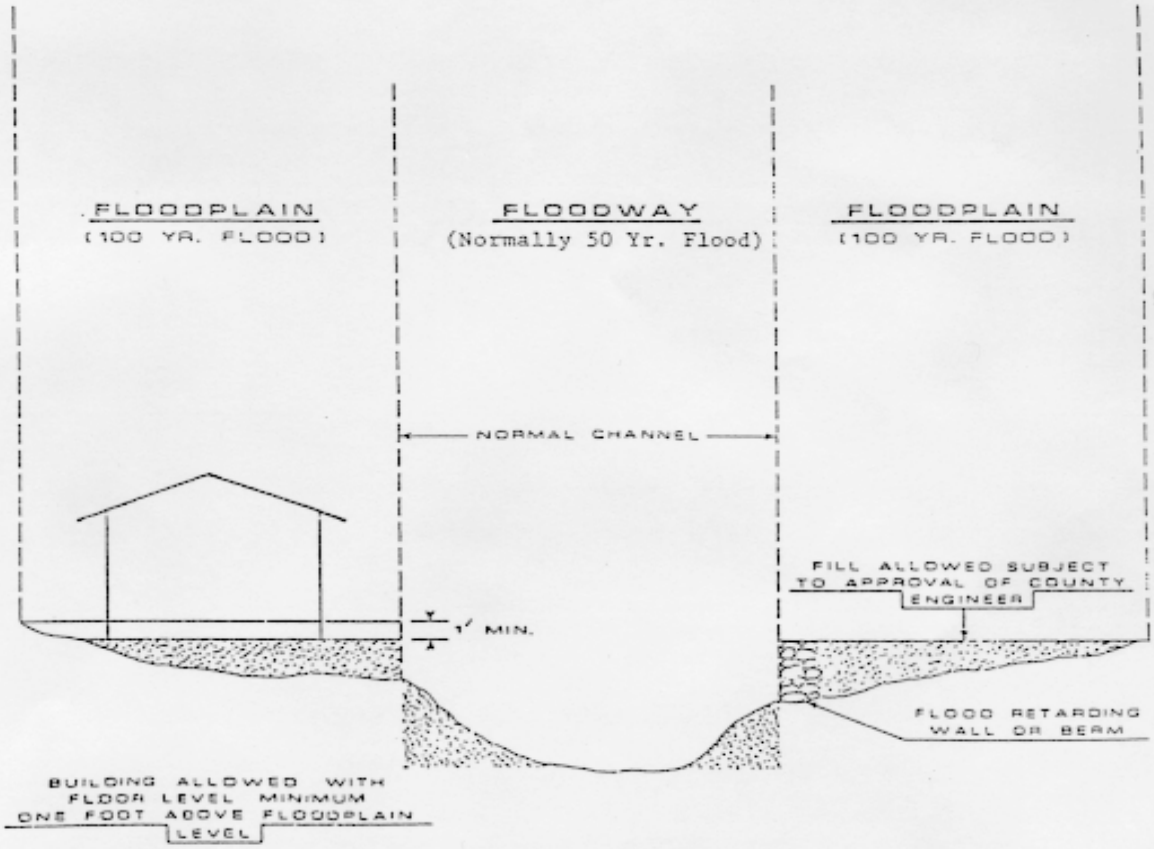

Section 2.15.C: DESIGN REVIEW OVERLAY ZONE--DRO ZONE

1. Purposes

   In order to protect and enhance the visual quality of certain areas of the County, the Board of Supervisors, upon recommendation by the Planning and Zoning Commission, may in addition to an existing zone classification as specified in this Ordinance, apply the Design Review Overlay Zone to such area to accomplish the following purposes:

   1. To ensure that the development, Buildings or Structures will conserve the values of adjacent properties and will not prove detrimental to the character of Buildings or Uses already established in the area.
   2. To ensure that the proposed development will be properly related to its Site and to surrounding Sites and Structures, and to prevent the construction of Structures that would be inharmonious with their surroundings.
   3. To ensure that Sites, projects and Structures subject to Design Review are developed with due regard for the environmental qualities of the natural terrain and landscape, and, that trees and shrubs are not indiscriminately destroyed.
   4. To ensure that the design and exterior architecture of proposed Structures will not be so at Variance with either the design or exterior architecture of the Structures already constructed or being constructed in the immediate neighborhood as to cause a substantial depreciation of property values in the neighborhood.
   5. To ensure that open spaces, parking areas, and Landscaping are designed to enhance the visual and physical use of the property and to screen deleterious Uses.
   6. To ensure that the proposed development complies with all of the provisions of this Ordinance and the goals and objectives of the Comprehensive Plan or any amendment or element thereof or specific plan for the area.

2. Establishment and Application of Zones

   a. Upon application of the Design Review Overlay Zone to a specific area of the County, the Board of Supervisors, upon recommendation of the Planning and Zoning Commission, shall establish design guidelines for that area. Said guidelines may include exterior design, materials, textures, colors, and means of illumination.

   b. The provisions of this Section shall be applicable only to multiple-family developments, commercial or industrial establishments, and public or semi-public Uses and all Signs for such Uses.

   c. All development or redevelopment described in Subsection above, including Buildings, Structures, Signs, Landscaping, site layout and Use relationships, to be located within the Design Review Overlay Zone shall be first approved under the provisions of this Section by the Planning and Zoning Commission prior to

the letting of permits for and/or initiation of such development. Redevelopment shall include, but not be limited to, any remodeling or change in appearance of the exterior of any Structure, or the appearance of any Site.

d. Approval of all development to be located within the Design Review Overlay Zone shall be based upon a finding by the Commission that such development conforms to the applicable design guidelines as required by Subsection A, above.

e. Within the Design Review Overlay Zone, all Uses permitted in the underlying zone with which the DRO Zone is combined are permitted.

3. Approval Process

a. Design Review Overlay Application Requirements

Design Review Overlay applications shall follow requirements and procedures for Permits requiring hearing and in addition the following information shall be submitted when applying for Design Review Overlay approval:

1. Documentation shall be provided in a written description as well with supplemental data to show compliance with the specific guidelines of the adopted design review guidelines for the following communities: Kachina Village, Mountainaire, Oak Creek Canyon, Doney Park/Timberline/ Fernwood, and the Fort Valley Highway 180 Scenic Corridor.

b. Timeframe of ~~Administrative~~ Approval

Paint color, Landscaping, Signs, fencing and other minor improvements may be administratively approved by staff**.** A Design Review Overlay application is not required for an administrative approval which may be completed in conjunction with an associated lighting permit, Sign permit or Building Permit. Applicants may take any proposal directly to the Planning and Zoning Commission for review in lieu of an administrative decision.

c. Investigation and Report

The Director of Community Development shall make an investigation of the application and shall prepare a report thereon which shall be submitted to the Planning and Zoning Commission and made available to the applicant prior to the public hearing.

d. Action by the Planning and Zoning Commission

Within 45 days of the date the drawings are submitted, the Planning and Zoning Commission shall act on the proposal. Failure of the Commission to act within 45 days shall be deemed approval of the drawings unless the applicant shall consent to an extension of time.

e. Effective Date of Design Review Decision

A decision of the Planning and Zoning Commission on a Design Review shall be effective immediately upon receipt by the Department of Community Development of a signed agreement to the conditions of approval; provided,

however, that an applicant or any other person may appeal said decision to the Board of Supervisors within fifteen (15) days from the date of such decision.

f. Appeal to the Board of Supervisors

A decision of the Planning and Zoning Commission on a Design Review may be appealed to the Board of Supervisors as prescribed in Section 30.6-1 (Appeal of Decision of Planning and Zoning Commission).

g. Action by Board of Supervisors on Appeal

The Board of Supervisors shall hold at least one public hearing on a decision of the Planning and Zoning Commission which has been appealed per the requirements of Section 30.6-3.

h. Lapse of Design Review Approval

Design Review approval shall lapse and shall be void one year following the date upon which the plans and drawings were approved unless prior to the expiration of one year a Building Permit is issued and construction is commenced and

diligently pursued toward completion.

Chapter 3. SPECIAL USES AND CONDITIONS

Section 3.1: Purposes

1. The provisions of this Section shall apply to the uses and conditions hereinafter enumerated. Where this Section prescribes regulations more restrictive than the zone in which a use or conditional use is permitted, the provisions of this Section shall apply.

Section 3.2.A: Purpose

Section 3.2.B: Applicability

All time requirements are consecutive days per calendar year unless specifically stated otherwise. Only one temporary use permit is to be issued for a parcel at any one time. Temporary use permits shall not have overlapping time frames. Multiple temporary uses may be considered only through Planning & Zoning Commission approval.

a. Special events shall include such outdoor activities as:

   1. Transient amusement activities (carnivals, circuses)
   2. Tent revivals, seasonal festivals
   3. Outdoor sales events (sidewalk, parking lot sales)
   4. Outdoor art and craft shows, exhibits (art, craft, RV, boat)
   5. Events shall be limited to a maximum of three (3) times per calendar year not to exceed a maximum duration of five (5) days per event.

b. Seasonal Stables and Horseback Rides

c. Seasonal Game Receiving Stations or Processing

d. Christmas tree sales lots, subject to not more than 40 days of site occupation and operation per year.

e. Pumpkin sales lots, subject to not more than 30 days of site occupation and operation per year.

f. Campaign offices subject to not more than 70 continuous days of site occupation and operation.

g. Religious, patriotic, historic, or similar displays or exhibits within yards, parking areas, or landscaped areas, subject to not more than 30 days of display in any one year period for each exhibit.

h. Contractor's office and storage yards on the site of an active construction project.

i. Office trailers for security purposes on the site of an active construction site of major development projects. Temporary use permits may be issued for the length of the construction project but for no longer than 12 months. Permit may be renewed annually so long as project remains in active status.

j. Stands for the sale of jewelry, furs, rugs and similar home-type products subject to not more than 30 days per year.

k. Stands for the sale of produce subject to not more than 30 days per year. The provisions of this subsection do not apply to the sale of produce raised on the premises.

l. Temporary retail food sales subject to not more than 30 days per year. This shall include stands for sales at one (1) day special events.

m. Establishment of batch plants in conjunction with road construction projects subject to Planning and Zoning Commission approval.

n. Establishment of Forest Materials Storage and Value-Added Production in conjunction with restoration projects subject to the Planning and Zoning Commission approval.

o. Temporary occupancy of a Recreational Vehicle or a Travel Trailer in the G, AR, RR, or MHP Zone for a period not to exceed 100 consecutive days per calendar year, provided that the lot or parcel is not already occupied by a Dwelling or other residential Structure. Approved method of wastewater disposal such as a self contained unit, chemical toilet or porta-potty is required.

p. Upon the issuance of a Building Permit, temporary occupancy of a Recreational Vehicle or a Travel Trailer in the G, AR, or RR Zone for a period not to exceed six months, provided that the Lot or parcel is not already occupied by a Dwelling or other residential Structure. The temporary use permit may be renewed only if the Building Permit is issued for a Dwelling, and if the Building Permit remains active.

q. Additional uses, intensities and timeframes determined to be similar to the foregoing may be granted permits by either the Director of Community Development or the Planning and Zoning Commission.

Section 3.2.C: Performance Standards

1. NOISE: Noise shall not be generated by any use to the point of disturbing the peace, quiet and comfort of neighboring residences or businesses.
2. PARKING: Adequate parking shall be provided. All parking shall be located on the same property as the temporary use; public Rights-of-Way shall not be used for parking.
3. LOCATION: No permit shall be issued for a Use the location of which is deemed to be potentially hazardous to the public. This includes, but is not limited to, heavily congested and/or trafficked areas where the use may impede or inconvenience the public. No use shall be permitted in a public Right-of-Way.
4. SANITATION: All requirements of the County Health Department and/or other regulatory Health Authorities shall be met. Provisions for disposal of solid waste shall be required for all Uses.
5. SIGNS: One (1) freestanding or wall mounted Sign not exceeding six (6) square feet in area and six (6) feet in height is permitted. A diagram of the Sign indicating size, text, location on site is required. Color and materials may be reviewed if site is within a DRO Zone. No off site Sign is permitted. Additional signing may be permitted at the discretion of the Planning and Zoning Commission.
6. LIGHTING: All lighting sources shall be aimed or shielded so that the direct illumination shall be confined to the property boundaries of the light source. The operation of searchlights or similar lighting sources is prohibited.

7. OTHER PERMITS: Any required Health Department and Sheriff's Office permits or licenses shall be obtained.

Section 3.2.D: ~~Temporary Use Permits Requirements~~ Permits and Administration:

1. All temporary uses shall be subject to the issuance of a temporary use permit. Issuance may be through the action of the Director of Community Development or the Planning and Zoning Commission. Permits issued through the Director of Community Development shall **follow Section Administrative Permit requirements and procedures. Permits issued through the Planning and Zoning Commission shall be subject to the standards of Section Permits requiring Hearing.**
2. Temporary Use Permits shall be issued when compliance with this Ordinance is verified. If the Community Development Director or Planning and Zoning Commission determines that the proposed temporary use does not comply with this Ordinance. The permit shall be denied.

   Approval of a Temporary Use Permit application shall require compliance with the ~~following~~ **above** performance standards and any further conditions deemed necessary by the Director of Community Development or the Planning and Zoning Commission in order to reduce possible detrimental effects to surrounding developments and to protect the public health, safety and welfare. Failure to comply with the **performance** ~~following~~ standards could result in denial or revocation of a Temporary Use Permit.

3. No work shall commence on a temporary use until the issuance of a permit.
4. No Temporary Use Permit shall be issued if the temporary use is in Violation of other laws or impairs property rights. The Director of Community Development will determine if the Violation or impairment exists with appeal to Superior Court.
5. Extensions and Renewals
   a. All temporary uses shall fit the prescribed timeframes outlined in this section.
   b. Requests to exceed timeframes, extend the lapse date of an existing permit, or renew a permit beyond stated timeframes shall be heard by the Planning and Zoning Commission.
6. Appeal
   a. Administratively Approved Permits

      A decision by the Director may be appealed within thirty (30) days to the Planning and Zoning Commission. The decision of the Commission shall be final.

   b. Planning and Zoning Commission Approved Permits

      A decision by the Planning and Zoning Commission may be appealed within fifteen (15) calendar days to the Board of Supervisors by the applicant or any other person as prescribed in Section 30.7 (Appeals: Board Review)
7. Condition of Site Following Temporary Uses

Each site occupied by a temporary use shall be left free of debris, litter, or any other evidence of the temporary use upon completion or removal of the Use, and shall thereafter be used only in accord with the provisions of the zoning regulations. Site shall be restored to previous conditions or better.

Section 3.3.A: Purpose

1. **To provide high levels of flexibility and allowances for small-scale agriculture and the keeping of certain animals which provide healthy and affordable source of food and fiber and companionship.**
2. **To support self-reliance and promote economic well-being.**
3. **To support animal welfare.**
4. **To avoid adverse impacts on adjacent properties by reason of dust, fumes, noise, odor, insect or vermin infestations, or visual blight, and to maintain the public health, safety, and welfare.**

Section 3.3.B: Applicability

1. **The following standards for Agriculture and the keeping of animals are applicable to all zones unless otherwise noted.**
2. **Additional Agriculture and animal keeping Uses may be permitted in specific zones. Please check specific zone for such Uses.**
3. **All other provisions of this Ordinance shall remain applicable unless otherwise specified.**

Section 3.3.C: Performance Standards

1. Agriculture
   a. Agriculture and gardening is permitted in all zones.
   b. Sale of products raised **or grown** on the **Lot** ~~premise~~ shall be permitted.
      1. Farm Stands are permitted subject to setbacks of the underlying zone. Projections into Side and Rear Yards shall be prohibited. Projections into Front Yards shall be allowed one half (1/2) the required Yard.
      2. Signage shall be limited to allowances for agricultural uses in the underlying zoning.
      3. Parking shall be provided for on-site and spaces shall be delineated.
   c. Community Gardens shall be permitted through the issuance of an Administrative Permit in all zones subject to the following:
      1. Community Gardens of fifteen (15) plots no greater than 400 square feet in area shall be permitted.
         i. A Conditional Use Permit may be requested in order to exceed fifteen (15) plots.
      2. The property shall Front on and have direct Access on a Road

accepted for maintenance by the County or other governmental agency.

i. A waiver may be granted by the Director of Community Development if an agreement of affected property owners which includes provisions for traffic related to the Community Garden is produced.

3. All parking shall be on-site and spaces shall be delineated. Parking surfaces shall be improved to the satisfaction of the Director of Community Development.

4. Community Gardens shall be located on land that is level enough to support the intended use without excessive grading or the excessive removal of trees.

5. The site shall be designed and maintained so that water and fertilizer will not drain to adjacent property.

6. Any fencing shall meet the Standards of Section and the exterior shall be natural, earth-toned colors. Chain link should be avoided.

7. Hours of operation shall be limited to the hours between sunrise and sunset.

8. Signage shall be limited to allowances for agricultural uses in the underlying zone.

9. Waste receptacles shall be provided and screened from neighboring properties. Refuse shall be removed so as not to cause a Nuisance.

10. A Structure shall be provided for the storage of any tools, fertilizers, equipment or other materials used in conjunction with the Community Garden. Such facilities shall screen materials from neighboring properties and shall be adequately secured.

11. Structures associated with such Use shall be permitted prior to the establishment of a residence where otherwise prohibited.

12. Composting shall be permitted.

i. Composting shall be done in a facility specifically designed for that purpose. Uncontained piles are prohibited.

ii. Composting facilities shall be located twice the distance of the required Setback from adjoining Lots.

13. Heavy equipment shall be prohibited unless approved through a Conditional Use Permit.

14. The property shall be maintained in a neat and orderly fashion.

d. Farmers' Markets shall be permitted subject to the issuance of Conditional Use Permit in all zones.

2. **Animal Keeping**

a. No animal may be fed, watered or sheltered ~~closer than 100 feet to a neighboring residence~~ **within any Front, Side or Rear Yard Setback**.

   1. Certain animals may require more restrictive Setbacks as outlined herein.

   2. Requests for reductions in Setbacks or required Lot size for the keeping of animal keeping may be heard by the Board of Adjustment.

b. All animals shall be maintained on property. **Shelter and fencing (e.g. barn, coop, corral, pens, stables, etc.) shall be provided to sufficiently contain the animals and keep them from roaming at large.**

c. No animal may be permanently fed, watered, or sheltered within 150 feet of a perennial water source.

d. Offspring of animals maintained on the same property that are less than four months old or that have not been weaned, whichever is longer, shall not be subject to the maximum animal counts.

e. A Conditional Use Permit may be requested to exceed allowances for the number of animals kept on-site or to request a waiver if documentation is available that specific provision inhibit best ecological practices on a Lot.

f. Additional Requirements for the keeping of specific animals are as follows:

   1. Aviaries ~~and apiaries~~

      A minimum of 1 acre Lot Size is required.

   2. Bee Keeping

      i. The number of hives permitted on a Lot shall be subject the following

         a. One (1) beehive shall be permitted per on any Lot regardless of Zone or Lot Size.

         b. One additional hive shall be permitted for every additional 6,000 feet of Lot Size.

         c. On Lots great than five (5) acres there shall be no restrictions on the number of hives.

      ii. Beehives shall be setback a minimum of twenty (20) feet from any property line.

      iii. Where the entrance to a hive is located closer than fifty (50') to a Lot Line, a flyway barrier shall be established and maintained so that all bees are forced to fly at an elevation of at least six feet above ground level in the vicinity of the beehive. Barriers shall be subject to the following:

         a. The barrier shall comply with the provisions of Section 3.15 Fences and Screening;

b. The height of the barrier shall be a minimum of six feet;

c. The barrier shall be solid such that bees cannot fly through it;

d. The barrier shall be placed parallel to the hive entrance;

e. The barrier shall extend a minimum of four (4') feet beyond the entrance to the beehive(s) in each direction.

iv. A convenient source of water shall be made available to bees at all times to prevent bees from congregating at swimming pools, pet watering bowls, bird baths, or other water sources.

v. In any instance in which a colony exhibits highly defensive behaviors by stinging or attempting to sting without due provocation, beekeepers shall promptly re-queen the colony with a less defensive queen. Queens shall be selected with a gentle disposition from stock bred for gentleness and non-swarming characteristics.

3. Cats

i. A maximum of four ~~dogs and/or~~ cats over the age of four months shall be permitted **on properties up to one (1) acre in Lot size.** ~~Kennel, non-commercial- P~~

ii. A maximum of one (1) additional animal for every additional one half (1/2) acre of Lot size up to a maximum of ten (10) such animals shall be permitted.

iii. ~~Kennel, Commercial- CUP~~

4. Dogs

i. A maximum of four dogs ~~and/or cats~~ over the age of four months shall be permitted **on properties up to one (1) acre in Lot size.** ~~Kennel, non-commercial- P~~

ii. A maximum of one (1) additional animal for every additional one half (1/2) acre of Lot size up to a maximum of ten (10) such animals shall be permitted.

iii. ~~Kennel, Commercial- CUP~~

5. Community Coops and Animal Keeping shall be permitted through the issuance of an Administrative Permit in all zones subject to the following

i. A care-taker shall reside on the Lot.

ii. The property shall have direct Access on a Road accepted for maintenance by the County or other governmental agency.

a. **A waiver may be granted by the Director of Community Development if an agreement of affected property owners, which includes provisions for traffic related to such Use, is produced.**

iii. **Any fencing shall meet the Standards of Section and the exterior shall be natural, earth-toned colors. Chain link should be avoided.**

iv. **The site shall be designed and maintained so that water, waste and chemicals will not drain to adjacent properties.**

a. **A record of chemical Use shall be maintained and made available on request.**

v. **Hours of operation shall be limited to the hours between sunrise and sunset.**

vi. **Signage shall be limited to allowances for agricultural uses in the underlying zone.**

vii. **All parking shall be provided for on-site and spaces shall be delineated. Parking surfaces shall be improved to the satisfaction of the Director of Community Development.**

viii. **Waste receptacles shall be provided and screened from neighboring properties. Waste shall be removed so as not to cause a Nuisance.**

ix. **A Sanitation Station shall be provided.**

x. **Structures associated with such Use shall be permitted prior to the establishment of a residence where otherwise prohibited.**

xi. **A Structure shall be provided for the storage of any tools, fertilizers, equipment or other materials used in conjunction with the Community Coops. Such facilities shall screen materials from neighboring properties and shall be adequately secured.**

xii. **The number of animals is limited to two (2) such animals for every one thousand (1,000) square feet of Lot Size with no more than a total of eighty (80) animals.**

a. **Coops shall be Setback twice the distance of the Setback for the underlying zone.**

b. **A minimum of five acres is required for the keeping of roosters, turkeys, peafowl, geese, and similarly noisy animals.**

c. **Animals shall be provided with a covered, predator proof shelter with a minimum of four (4) square feet per animal.**

d. **An additional ten (10) square feet of run shall be provided per animal.**

xiii. The community keeping of other animals found in this Section may be permitted subject to the same number and provisions described herein.

xiv. Food shall be stored in animal-proof containers.

xv. Any mass of Animals have sickened or died for unexplained reasons or mammals which display any signs of rabies shall be tested to determine the cause of illness and reported to the Public Health Services District.

xvi. Composting shall be allowed.

a. A facility specifically designed for composting shall be provided. Uncontained piles are prohibited.

b. Composting facilities shall be located twice the distance of the required Setback from adjoining Lots.

xvii. The slaughter of animals is prohibited.

xviii. The property shall be maintained in a neat and orderly fashion.

6. Horses and Livestock

i. A minimum of one (1) acre of **Lot Size** ~~land~~ shall be required for the **keeping** ~~maintenance~~ of such animals.

ii. Three such animals may be maintained on the first acre and up to one additional animal for each additional one half acre

iii. No such animal may be sheltered, fed, or watered closer than **55 feet to a Lot Line.** ~~100 feet to a residence occupied by other persons~~.

iv. Protection for natural elements such as wind and sun shall be provided.

v. ~~The keeping of all animals shall be subject to the regulations and conditions of the Coconino County Health District and Animal Management Division.~~

vi. Boarding of 1 or 2 horses for a fee is permitted subject to the above standards. Additional boarding may be allowed though issuance of a Conditional Use Permit.

a. ~~The Keeping or raising of animals for commercial purposes including commercial stables where more than two horses are boarded~~

b. ~~For the commercial boarding of more than 2 horses, a minimum of 5 acres of gross area is required~~

7. P**oultry and Rabbits**

i. ~~The non-commercial keeping of poultry and rabbits at least 100 feet from a residence belonging to other persons- P~~

ii. ~~The Keeping of poultry or rabbits for commercial purposes- C~~

iii. Every Lot shall be entitled to minimum of five (5) such

animals.

iv. **A maximum of one (1) animal for every 1,000 square feet of Lot Size with no more than a total of twenty (20) such animals except in the G and AR Zones which shall allow for the keeping of up to such forty (40) animals.**

v. **A minimum of one (1) acre is required for the keeping of roosters, turkeys, peafowl, geese, and similarly noisy animals.**

a. **Such animals shall be kept in a coop enclosed with a solid material during hours of darkness so as to limit crowing and noise.**

b. **A Conditional Use Permit may be sought for the keeping of such animals on parcels smaller than one (1) acre.**

vi. **Animals shall be provided with a covered, predator proof shelter with at least four (4) square feet per animal.**

vii. **Slaughtering shall be permitted for personal use only.**

8. **Potbellied Pigs**

i. **A maximum of two (2) such animals on Lots up to one half (1/2) acre in Lot Size are permitted. An additional two (2) animals are permitted for each additional one half (1/2) acre.**

ii. **The weight of each potbellied pigs is capped at sixty (60lbs) pounds.**

iii. **Unless contained within a Dwelling, feeding, watering or sheltering shall be setback:**

a. **A minimum of 300 feet from a neighboring residence or building for public use.**

b. **A minimum of 200 feet from a water source or storm water area.**

9. **Miniature Goats**

i. **A maximum of two (2) such animals on Lots up to one half (1/2) acre in Lot Size are permitted. An additional two (2) animals are permitted for each additional one half (1/2) acre.**

ii. **The weight of each miniature goats is capped at ninety (90lbs) pounds.**

10. **Swine, excluding potbellied pigs**

i. A minimum of one (1) acre of **Lot Size** ~~land~~ shall be required for the keeping of swine.

ii. Three such animals may be maintained on the first acre and up to one additional animal for each additional one half acre

iii. ~~The keeping of all animals shall be subject to the regulations and conditions of the Coconino County Health District and Animal Management Division.~~

iv. Feeding, watering or sheltering shall be setback:

a. A minimum of 300 feet from a neighboring residence or building for public use.

b. A minimum of 200 feet from a water source or storm water area.

11. Wild, non-domesticated or Exotic Animals

i. May be allowed through the granting of a Conditional Use Permit.

a. Approval from Arizona Game and Fish Department is required prior to application.

Section 3.3.D: <u>Permits and Administration:</u>

1. **Permits are not required for Agriculture and Animal Keeping unless otherwise noted.**
2. **Performance and Permitting do not alleviate the applicant from the duty of obtaining all applicable Building, Environmental Quality,Engineering, Public Health Services District and other State and Federal permits apply.**
3. ~~Licensing may be required through Coconino County **Health Services District.**~~

Section 3.4.A: Purpose:

To increase housing supply, achieve housing affordability goals, promote integrated conservation design and the use of sustainable building techniques while preserving single Family residential and neighborhood character.

Section 3.4.B: Applicability:

This Section is applicable to Residential Zones and single Family residential properties in the PC Zone.

Section 3.4.C: Performance Standards:

Approval of ~~Guest House or Accessory Living Quarters subject to the following conditions:~~ **Accessory Dwellings shall require compliance with the following performance standards:**

a. A maximum of one Accessory Dwelling is permitted per Lot.

b. ~~Attached Accessory Living Quarters I~~**n all single Family residential areas, an** A**ccessory Dwelling of up to 400 square feet livable area is permitted** regardless of ~~parcel~~ **Lot or principal Dwelling size.** ~~Detached Guest Houses are permitted only on parcels of two acres or larger.~~

c. Accessory **Dwellings** ~~Living Quarters and Guest Houses~~ are **further** limited to 50% of the livable square footage of the main Dwelling up to a maximum of ~~800~~ **1000** square feet for a **D**etached **Accessory Dwelling** ~~Guest House~~, or ~~1000~~ **1200** square feet for an **A**ttached **Accessory Dwelling**. ~~Accessory Living Quarters unless waived through Conditional Use Permit for an existing structure.~~

d. ~~Kitchens are allowed.~~

e. Only a single Family Dwelling or Modular Home may be used as an Accessory Dwelling. Travel Trailers, **Park Models**, Recreational Vehicles, Manufactured and Mobile Homes are **prohibited** ~~not allowed~~ as ~~Guest Houses or Accessory Living Quarters~~ **Accessory Dwellings.**

f. All utilities **may be on separate** meters than the principal Dwelling **unless otherwise prohibited be a utility company**.

g. Maximum separation between the ~~main~~ **principal** Dwelling and ~~Guest House~~ **Detached Accessory Dwelling** shall be **sixty** (60') **feet on Lots less than four (4) acres and one hundred (100') feet on Lots four (4) acres or greater.** ~~measured from livable space to livable space. unless waived by though Conditional Use Permit for existing structure.~~

h. ~~A deed restriction shall be recorded prior to issuance of a building permit~~

~~indicating that the Guest House or Accessory Living Quarter is for family and friends and not for rental.~~

i. Accessory Dwellings shall share some common features with the principal Dwelling. Common features may include, but are not limited to, roof pitch, colors, porches and window treatments or other components of the exterior appearance.

Section 3.4.D: <u>Permits and Administration:</u>

1. **Applicable Building, Environmental Quality and Engineering Permits apply. Planning and Zoning review shall be conducted through the issuance of such permits.**
2. ~~Application for a Conditional Use permit can be requested for~~ A waiver of the requirements ~~of~~ **for** separation **distance** and maximum square footage **may be requested in writing from the Director of Community Development if the waiver is necessary to achieve the following:**
   a. For existing Structures to be converted ~~into a detached Guest House on parcels greater than 2 acres.~~ **into an Accessory Dwelling,**
   b. Protection of Environmentally Sensitive Features,
   c. Energy efficiency through passive solar design,
   d. The accommodation of alternative energy or water conservation systems.
3. **A decision of the Director of Community Development may be appealed to the Planning and Zoning Commission.**

Section 3.5.A: Purpose

Section 3.5.B: Applicability

Home Occupations, where permitted by the provisions of this Ordinance, shall be subject to the approval of the Director of Community Development and shall comply with the following **Performance Standard**s ~~regulations:~~

Section 3.5.C: Performance Standards

1. A Home Occupation shall be conducted in a Dwelling and shall be clearly incidental to the Use of the Structure as a Dwelling.
2. In no way shall the appearance of the Structure or the premises be so altered or the conduct of the occupation within the Structure be such that the Structure or premises may be reasonably recognized as serving a non-residential Use (either by color, materials, or construction, lighting, Signs, sounds or noises, vibrations, display of equipment, etc.).
3. No one other than a resident of the Dwelling shall be employed in the conduct of a Home Occupation.
4. No motor or mechanical equipment shall be permitted other than normally incidental to the Use.
5. The Use shall not generate pedestrian or vehicular traffic beyond that normal to the district in which it is located.
6. No storage of materials and/or supplies, including vehicles or equipment used in the occupation, indoors or outdoors, shall be permitted which will be hazardous to surrounding neighbors or detrimental to the residential character of the neighborhood.
7. No Building or space outside of the main Building shall be used for Home Occupational purposes except approved Agricultural/horticultural related activities.
8. There shall be no use of utilities or community facilities beyond that normal to the Use of the property for residential purposes.
9. A Home Occupation shall not create any radio or television interference or noise audible beyond the boundaries of the site.
10. No smoke, odor, liquid, or solid waste shall be emitted.
11. There shall be no outdoor storage or display of materials or equipment maintained on the premises.
12. The conduct of the Home Occupation shall not interfere with the maintenance of the required off-street parking spaces on the property.

Section 3.5.D: Permits and Administration:

1. The application shall be subject to periodic review by the Director of Community

Development. Violation of any criteria listed above shall result in cancellation of the Home Occupation permit.

2. A decision of the Director of Community Development regarding the approval, disapproval, or conditions imposed may be appealed in writing to the Planning and Zoning Commission within fifteen (15) days of notice of the decision.

Section 3.6.A: Purpose

Section 3.6.B: Applicability

Cottage Industries, **in Zones in which they are listed Use,** may be permitted subject to the granting of a Conditional Use permit per Section 30.4 by the Planning and Zoning Commission, and if approved shall comply with the following restrictions:

Section 3.6.C: Performance standards

1. The entrepreneur of the Cottage Industry shall reside on the property.
2. The number of persons employed in connection with the Cottage Industry and who are not residents of the Dwelling shall not exceed three (3) full time employees or the equivalent part-time.
3. The Cottage Industry may be conducted either within the Dwelling or an Accessory Structure, or both, provided that not more than 50% of the combined floor area shall be used in the conduct of the Cottage Industry.
4. One non-illuminated Sign not exceeding six (6) square feet in area and six (6) feet in height shall be permitted. Colors of Sign background, Sign lettering, and support structure shall be earth tones complementary to the natural surroundings.
5. Adequate off-street parking shall be provided according to the provisions of Section 25: Off-Street Parking. There shall be a maximum of five (5) parking spaces.
6. Any outdoor storage shall be as permitted in the underlying zone or as specified by the Commission. Outdoor storage shall be completely enclosed with a solid six (6) foot high fence or wall.
7. Parking of Commercial Vehicles shall be as permitted in the underlying zone.
8. Property for which a conditional use permit for a Cottage Industry is approved shall front on and have direct Access on a Road accepted for maintenance by the County or other governmental agency.
9. Outdoor lighting shall conform to Section 27: Lighting.
10. Direct sales of products is allowed if such sales are specifically provided for in the Use permit.
11. The business shall not generate any noise, vibration, smoke, dust, odor, heat, glare, or electrical interference with radio or television reception that would exceed that normally produced by a Dwelling Unit.

Section 3.6.D: Permits and Administration:

1. **Establishment of a Cottage Industry shall require issuance of a Conditional Use Permit in compliance with the provisions of Section**

2. The Commission may grant a Conditional Use permit for up to three (3) years. If all requirements of this Section and of the use permit have been consistently met, and if no complaints have been filed with the Department of Community Development, the Use permit may be renewed for up to five (5) years.

Section 3.7.A: Purpose:

The purpose of this Section is to establish the criteria, process, rules and standards for the short-term Vacation Rental of residential properties for any period of time less than 30 days in order to protect the public health, safety, and welfare, support tourism, and housing affordability while preserving the residential character of neighborhoods, minimizing nuisance and provide equity with other residential and commercial Uses.

Section 3.7.B: Applicability:

The provisions of this Ordinance shall apply to all Vacation Rentals that exist at the time of the effective date of the ordinance codified in this section and all Vacation Rentals proposed after the effective date of the ordinance.

Section 3.7.C: Performance Standards:

All Vacation Rentals are subject to the following standards unless a Conditional Use Permit is approved by the Planning and Zoning Commission to allow a Vacation Rental to exceed the standards. Proposed Vacation Rentals that exceed the standards in this section may be permitted at the discretion of the Planning and Zoning Commission subject to the granting of a Conditional Use Permit.

a. Vacation Rentals shall not be permitted in non-habitable structures such as, but not limited to, garages or other accessory structures or temporary or portable structures such as tents, yurts, travel trailers or RVs.

b. Occupancy: Each Vacation Rental shall be limited to overnight occupation by a Family; and further provided that said occupation shall not exceed two (2) individuals per bedroom plus two additional people up to a maximum of ten (10) individuals per dwelling, excluding children under three years of age.

c. Exterior Appearance: The exterior of the Vacation Rental shall maintain a residential appearance with house number visible from the street or road.

d. Noise and Disturbance. The Vacation Rental shall not be utilized in any manner that produces excessive noise, excessive traffic, excessive vehicles, excessive refuse and waste, or any disturbances that disturb the peace and quiet enjoyment of neighboring residences.

e. Special Events: Commercial or public functions and private or public events that are inconsistent with residential neighborhoods, including but not limited to auctions, concerts, organized recreational activities, weddings, banquets, conference centers and other similar Uses are prohibited.

f. Parking: Each Vacation Rental shall have one on-site parking space per Bedroom in the home with a minimum of two on-site parking spaces required **up to five spaces**. All on-site parking spaces shall be located upon improved surfaces set aside for that purpose in a site plan accompanying the permit

application. All vehicles shall be parked on-site in said spaces and no parking shall occur off-site.

g. Access: The access to the Vacation Rental shall be adequately maintained and remain clear of obstructions to ensure unimpeded passage of emergency vehicles and other traffic.

h. Signage: Signage shall not exceed the permitted allowances for residential uses in the underlying zone.

i. Accessory Dwelling/Guest House: On properties containing both a primary residence and an accessory dwelling unit or detached guest house, both units may be rented out as one property under the same contract.

j. Emergency Contacts: A laminated sheet containing emergency contact information shall be posted near the telephone or in a prominent and visible location if there is no telephone installed at the Vacation Rental. The emergency contact list shall include the following:

    1. "In case of emergency dial 911."
    2. The physical address of the Vacation Rental.
    3. The nearest major cross streets.
    4. The phone number and address of the nearest medical center or clinic.
    5. The name and phone number of the 24-hour local management contact.

k. Property Management Plan: A Property Management Plan (PMP) demonstrating how the Vacation Rental will be managed and how impacts to neighboring properties will be avoided shall be submitted for review and approval as part of the permitting process. Any changes to a Property Management Plan shall be approved by Community Development. The Property Management Plan shall include, but is not limited to, the following items:

    1. A contact name, phone number who is available 24 hours a day, seven days a week.
    2. A statement indicating the maximum occupancy of the property.
    3. Identification of quiet hours.
    4. A map indicating the property boundaries and designated parking locations
    5. Notification that on-street parking is not permitted.
    6. Provisions for the containment and disposal of waste and obligations of the Occupant.
    7. Provisions regarding the function and capability of on-site wastewater systems.
    8. Good neighbor provisions including, but not limited to, the considerate use of ATVs, snowmobiles, community property, keeping of animals, water resources, lighting and other expectations.

Section 3.7.D: <u>Permits and Administration:</u>

1. Pre-Application Meeting: The applicant shall attend a Pre-Application meeting prior to the submittal of an application.
2. All Vacation Rentals are subject to a renewable five year **Administrative** Vacation Rental zoning permit from Coconino County Community Development. On any property with a Conditional Use Permit, said permit shall be modified to include Vacation Rental and shall not be considered separate from the Conditional Use.
3. The applicant may be the property owner or the owner's agent, and shall be the party responsible for compliance with all provisions of this section and all applicable laws. The permit is personal to the owner and may not be transferred to another person or another property and shall not run with the land.
4. **In addition to the requirements for Administrative Permits in Section5.**1, the following information shall be submitted when applying for a Vacation Rental Permit.
    a. A Property Management Plan meeting requirements of subsection G.
    b. Confirmed attendance at a Pre-Application meeting for the proposed rental location and intensity.
    c. An affidavit confirming the installation of smoke detectors and egress per the Building Code.
5. If a Vacation Rental zoning permit or Conditional Use Permit is revoked, a new permit for the same owner and location may not be issued for a period of at least one year from the date of revocation.

Section 3.8: Bed and Breakfast Establishments

Section 3.8.A: Purpose

Section 3.8.B: Applicability

Bed and Breakfast Establishments, where permitted by the provisions of this Ordinance through the issuance of a Conditional Use permit per Section 30.4, shall be subject to the approval of the Planning and Zoning Commission and shall comply with the following **Performance Standard**s ~~regulations~~:

Section 3.8.C: Performance Standards

1. All provisions of Section 24.2.A pertaining to Home Occupations shall be met.
2. Applicants for a use permit shall be the property owners.
3. No more than two bedrooms shall be used at any one time.
4. No more than five boarders may be accommodated at any one time.
5. The maximum duration of stay of any one guest shall be ten days.
6. The boarders must enter through the main entrance of the Dwelling to get to their rooms, with no separate entrances allowed.
7. All parking must be accommodated on site.
8. The Commission may grant a Conditional Use permit for up to three (3) years. If all requirements of this Section and of the Use permit have been consistently met, and if no complaints have been filed with the Department of Community Development, the Use permit may be renewed for up to five (5) years.
9. For the use of two bedrooms, State and County Health Department approval and permits are required.

Section 3.8.D: Permits and Administration:

Establishment of a Bed and Breakfast shall require issuance of a Conditional Use Permit in compliance with the provisions of Section

SECTION 3.9: GROUP HOMES FOR THE HANDICAPPED

Section 3.9.A: Purpose:

The purpose of these regulations is to permit handicapped persons to reside in single family residential neighborhoods in compliance with the Fair Housing Act, while preserving the residential character of the neighborhood.

Section 3.9.B: Applicability

1. Zoning Confirmation: Prior to registration, a request for zoning confirmation may be submitted to the Community Development division to confirm that the proposed location of the group home is permitted under this section.
2. Additional Requirements of State Law: Notwithstanding the foregoing, if the State has adopted laws or rules for the regulation of a specific type of home, such as a Group Home for the developmentally disabled pursuant to ARS § 36-582 or an assisted living home pursuant to ARS Title 36, Chapter 4, then any such State law or rule shall apply in addition to the conditions listed herein and shall preempt any conflicting condition listed herein.

Section 3.9.C: Performance Standards

Group Homes for the Handicapped shall be located, developed, and operated in compliance with the following standards:

a. Separation. The minimum separation between group homes shall be 1,200 feet, as measured from the closest property lines. No separation is required when Group Homes are separated by a utility Right-of-Way of at least 300 feet in width, or by a freeway, arterial Street, canal, or railroad.

b. Occupancy. The number of residents, excluding staff, shall not exceed 10.

c. Exterior Appearance. There shall be no sign or other exterior indication of a Group Home visible from a Street.

d. Compliance with all Applicable Building, Environmental Health and Fire Safety Regulations. If a Group Home has one or more non-ambulatory residents, building code requirements in addition to those applicable to Group Homes with no non-ambulatory residents, shall apply.

e. Licensing. Group Homes shall comply with applicable licensing requirements.

f. Parking. Any parking for the Group Home shall be on Site.

g. Tenancy. No Group Home shall house any person whose tenancy would constitute a direct threat to the health or safety of other individuals or would result in substantial physical damage to the property of others.

Section 3.9.D: Permits and Administration:

1. **Permits shall be subject to the standards in Section of Section Administrative Permits.**
2. Property is considered a Group Home for the Handicapped under this Ordinance after the Coconino County Community Development Department issues a Permit for a Group Home for the Handicapped for that property. Only property serving occupants who fit the definition of Handicapped under the Fair Housing Act are eligible for determination as a Group Home for the Handicapped.
    a. In order to secure a Permit for a Group Home for the Handicapped, an application must be submitted on the form prescribed by the Community Development Department. The application must be accompanied by the following: a Site Plan, a notarized statement detailing qualifications, copies of applicable licensed, an affidavit of compliance and other documentation indicating the use of the property as a Group Home for the Handicapped as may be required by the Director of the Community Development Department. The Director of Community Development may require additional information or plans, if they are necessary to enable a determination as to whether the circumstances prescribed for the granting of a Conditional Use Permit exist. The Director of Community Development may authorize omission of any or all of the plans and drawings required by this Section if they are not necessary.
    b. The Community Development Department will review the application for administrative completeness within 10 days after submission. The Department will have 30 days after administrative completeness to conduct its substantive review of the application. The total time for the granting or denying of the Certificate of Exemption is 40 days. Time frames are tolled and may be waived in accordance with A.R.S. §11-1601 et seq.
3. If standards are not met, the home shall be considered an Other Group Home and shall be subject to the provisions of the Zoning Ordinance guiding such an establishment. Status as a Group Home for the Handicapped is open to review by the Coconino County Community Development Department and may be canceled at any time upon a determination by the Director that the property is no longer being used for a qualifying purpose or meeting standards laid forth in this Ordinance. The denial of a Permit may be appealed to the Board of Supervisors subject the provisions of Section 30.7 of this Ordinance.
4. Request for Accommodation: If a Group Home owner believes any requirement of the Zoning Ordinance prevents the establishment of a Group Home in an economically viable manner, the owner shall submit a written request for accommodation and the reasons why the accommodation is required. The written request shall contain sufficient facts to allow an individualized determination of the group home's needs, to address safety and welfare concerns, and to assure compliance with this section. Community Development Department staff shall review the written request and determine:
    a. Whether an accommodation should be made pursuant to the requirements of the Fair Housing Act; and
    b. If so, the nature of the accommodation taking into consideration the requirements of the Fair Housing Act, public safety and welfare concerns, and

the residential character of the neighborhood.

c. The accommodation shall be made only to the extent necessary to comply with the Fair Housing Act.

Section 3.10.A: Purpose

1. The purpose of this section is to establish a process, rules and standards for the construction of Wireless Telecommunication Facilities to:
    a. To protect and promote the public health, safety and welfare.
    b. To provide guidelines for the siting and design of Wireless Telecommunication Facilities.
    c. To protect the county's environmental resources and to minimize adverse impacts on visual resources.
    d. To ensure that Wireless Telecommunication Facilities are compatible with adjacent land Uses.
    e. To minimize the number of towers by encouraging the joint use (co-location) of facilities and by maximizing the use of existing Towers and Structures.
    f. To allow competition in telecommunications service.
    g. To enhance the ability to provide wireless telecommunication services to county residents, businesses and visitors.

Section 3.10.B: Applicability

1. ~~Where Allowed~~:
2. Wireless Telecommunication Facilities require the granting of a Conditional Use permit by the Planning and Zoning Commission except as specified in Section H below. Facilities are preferred in the industrial (M-1-10,000, M-2-6,000, and MP) and commercial (CG-10,000, CH-10,000, and CN-2/A) zones, but are also permitted with a Conditional Use permit in the AR, RR, G, PRD, PC, PS, OS, RC, P, and MR zones. Facilities are not permitted in the residential (RS-6,000, RS-10,000, etc., RM-10/A, RM-20/A, MHP and RMH) zones.
3. Exemptions
    a. This Ordinance does not apply to Ham Radio Towers, which are regulated elsewhere in the Zoning Ordinance, or to satellite dishes for television reception at individual single family residences. In addition, a conditional use permit is not required to co-locate additional Antennas on already approved Towers unless it results in a substantial change in the approval, such as an increase in Tower Height. A conditional use permit is not required for attached Antennas where the Height of the Structure the Antenna is being attached to is not increased. Examples would be Antennas on existing utility or light poles, water Towers, or on the fascia of existing Buildings. A conditional use permit is also not required for a stealth design that meets the Height restriction of the zone in which the Tower is proposed to be located. Co-locations are subject to the same conditions of approval as the original conditional use permit.

Section 3.10.C: Performance Standards

1. Preferred Facilities:
    a. Site location and development of Wireless Telecommunication Facilities shall preserve the existing character of the surrounding land Uses and Buildings and the aesthetic visual character of the area. If technically feasible, new facilities shall use the most preferred facility type. The order of preference for new facilities is as follows (from most preferred to least preferred):
        1. Co-location on an existing Tower
        2. Antennas attached to existing Structures such as Buildings, light poles, utility poles
        3. Concealed or camouflaged facilities
        4. New sites on previously disturbed areas such as cinder pits
        5. New Towers/facilities under 100' in commercial or industrial zones
        6. New Towers/facilities 100'-175' in commercial or industrial zones
        7. New Towers/facilities under 100' in G, AR, or RR zones
        8. New Towers/facilities 100'-199' in G zones
        9. New Towers/facilities 100'-150' in AR or RR zones
        10. New Tower in other zones as described in Section C above
    b. New facilities shall use the most preferred facility type and location where technically feasible, even if it results in an increase in the number of facilities or a higher cost. A lesser-preferred facility type may be permitted only if the applicant presents substantial evidence to show that it will have a lesser visual impact or is more technically necessary than the use of more preferred facilities.
2. Disfavored Facilities
    a. Any site that is within a state or federal designated scenic corridor such as Highways 180, 64, and 89A.
    b. Any site within a visual corridor or scenic vista, for example in the view of the San Francisco Peaks, along a ridgeline exposed to view from highway travelers or to residential areas, along a public trail, in a park or recreation area, unless the facility blends with the surrounding natural and human made environment.
    c. Sites adjacent to or very close to residential areas.
    d. Sites adjacent to or very close to sacred sites.
3. ~~Performance Standards~~ **All Facilities**
    a. Height. New facilities shall not exceed 199 feet in Height.
    b. Setbacks. The Setback for Towers is 105% of the Tower Height from all property lines so that in case of collapse or failure the Tower would be contained on the property. Setbacks may be allowed to extend onto adjacent properties if there are dedicated fall zone easements. The Setbacks may be reduced if a registered

engineer can certify that in case of failure the tower would be contained on site. In commercial and industrial zones, the Setbacks may be reduced to 30% of the Tower Height if a registered engineer can prove that in case of failure the Tower would be contained on site. Guys and Accessory Structures must meet the Setbacks of the underlying zoning classification. Facilities that are located on new or replaced utility poles, street lights, or traffic signal poles are exempt from the Setback requirements.

c. Color and Materials. Towers and attached Antennas must be painted or coated in a color that blends with the surrounding environment. Muted colors, earthtones, and subdued hues, such as gray, shall be used. All associated Structures such as equipment Buildings, including the roofs, shall be painted with earthtone colors.

d. Fencing. New Towers, other than flagpoles, utility poles, or other camouflaged facilities, shall be fenced to prevent trespass.

e. Lighting. Lighting on any new Tower is prohibited unless required by the Federal Aviation Administration or by other applicable state or federal requirements. Motion detector security lighting may be approved if the lights are fully shielded. Any outdoor lighting requires a separate lighting permit.

f. Landscaping. Perimeter Landscaping may be required as a condition of approval of the facility, depending on the location. Existing vegetation shall be preserved to the maximum extent possible.

g. Signs. No advertising is permitted anywhere upon or attached to the facility. Signage is limited to small non-illuminated warning and identification Signs.

h. Permits. A Building Permit is required for the construction of any new Tower and for Accessory Structures.

i. Storage. Long-term vehicle storage and other outdoor storage are prohibited.

j. Term of use permit. The Conditional Use Permit shall have a time limit of no more than five years. Prior to the end of the five-year period, the applicant and/or Structure owner shall be responsible for submitting a new application for renewal. The applicant shall demonstrate that changes in technology have not eliminated the need for the facility as approved. Renewal of a conditional use permit shall be based on compliance with the conditions of approval.

4. Abandonment

The provisions of Zoning Ordinance Section 19, Nonconforming Situations, shall apply to Wireless Telecommunications Facilities. Pursuant to Section 19.11, a Tower shall be considered abandoned and the use discontinued if it is not utilized, i.e. there are no providers/Antennas on the tower, for a continuous period of 180 days.

5. Obsolescence and Removal

In addition to all other remedies available to Coconino County, if a facility is abandoned pursuant to Section I above and Section 19 of the Zoning Ordinance, or if

a facility becomes obsolete due to changing technology, it shall be the responsibility of the Tower owner and/or property owner to remove the Tower and to restore the site to its original condition within 60 days. If the Tower is not removed within this 60-day period, Coconino County may notify the Tower owner that it will contract for removal at the cost of the owner

Section 3.10.D: Permits and Administration:

1. **Establishment of a Wireless Telecommunications Facility shall require issuance of a Conditional Use Permit in compliance with the provisions of Section**
2. Application Process
    a. Prior to the submittal of a conditional use permit application, the applicant shall schedule a pre-application conference with staff of the Community Development Department. ~~Staff will review the Ordinance requirements and submittal requirements to ensure a complete application.~~ In addition, for facilities located within one-half mile of a residential area, the applicant shall hold a neighborhood meeting prior to the submittal of an application. Staff will attend the meeting and utilize the comments of neighbors in the analysis presented to the Planning and Zoning Commission. The requirement for a neighborhood meeting may be waived by the Director of Community Development.

    b. In addition to requirements of Section Permits Requiring hearing, the following shall be provided:

        1. Elevation drawings. The drawings shall show the Tower and proposed attached Antenna(e), as well as proposed Structures on the ground. Materials and colors shall be indicated and color samples shall be provided.
        2. Photo images. Photo simulations of the proposed facility from each direction shall be provided showing the Tower, all Antennas, Structures, and equipment facilities, demonstrating the true impact of the facility on the surrounding visual environment. The Community Development Department will assist in specifying recommended vantage points and the requested number of photo simulations at the pre-application conference.
        3. Communication plan. Each applicant shall provide a plan of its facilities to the County prior to or in conjunction with any application for the installation of a Wireless Telecommunication Facility. The plan shall cover the entire County extending five miles beyond the County border. The plan shall include the following. These shall be in general terms and are not meant to require submittal of confidential or proprietary information.
            i. All of the applicant's existing Wireless Telecommunication Facilities by size, type and coverage area
            ii. All presently anticipated future service areas, anticipated dates of development, and types and Heights of facilities desired for each of the service areas.

iii. The various types of Wireless Telecommunication Facilities used by the applicant to furnish service and when they are used. This includes drawings providing the sizes and shapes of the Antennas and other equipment as well as written materials describing their application.

iv. The applicant's policy direction for the mitigation and/or reduction of existing and proposed Towers to avoid the proliferation of such facilities.

v. The applicant's policy direction on the mitigation and/or reduction of the negative visual impacts created by new Towers, including any proposals to conceal or disguise such facilities designed to be architecturally and/or environmentally compatible with their surroundings.

vi. The applicant's policy direction on co-location of Antennas on their own facilities, on facilities from other applicants or Tower companies, or on other Structures that provide the verticality required for the Antennas.

vii. Designation of an agent (contact person) of the applicant who is authorized to receive communications and notices pursuant to this section.

4. Written narrative. A written narrative shall be submitted with the application explaining why the proposed site has been chosen, why the proposed Wireless Telecommunication Facility is necessary, why the requested height was chosen, ability of the facility to accommodate other providers, and any other information requested at the pre-application conference.

5. Existing Structures. Evidence shall be submitted demonstrating that no existing verticality can be utilized within the targeted search area, defined generally as a one mile radius, to meet the applicant's requirements.

6. Property owner list. A typewritten list of the names and addresses of all property owners, keyed to Assessor's Parcel Numbers, within 500 feet of the outside boundaries of the subject property for towers up to 99 feet, and within 1000 feet for towers from 100-199 feet.

7. For facilities within one quarter mile of residential areas, defined as neighborhoods or Subdivisions, evidence of notification of property owners within one quarter mile, map indicating Tower site and residential area, and evidence of neighborhood meeting including sign-in sheet and a description of how the design addresses the residents' concerns.

Section 3.11.A: Purpose

The purpose of this section is to establish the criteria, process, rules and standards for the use of Metal Storage Container boxes.

1. ~~Metal Storage Containers are defined as prefabricated, portable metal containers used for storage of personal property.~~

Section 3.11.B: Applicability

Section 3.11.C: Performance Standards

1. Temporary Uses in the G, AR, RR and RS Zones
    a. Upon the issuance of a ~~Building~~ **Administrative** Permit, two 160 square foot Metal Storage Containers may be established with a no-fee temporary use permit. A temporary use permit is required prior to the storage containers being located on site and may be issued for up to 18 months at a time. Temporary use permits may be renewed so long as Building Permit remains in active status.
    b. For non-permit projects (emergency situations related to fire or flood, or remodels), two 160 square foot Metal Storage Containers may be established with temporary use permit for up to 9 months. Emergency related projects are subject to a no fee permit. Temporary use permits may be renewed for an additional 9 month period.
    c. Metal Storage Containers shall be located at least 10 feet from the Front and Street Side Property Lines and shall meet Side and Rear Setback requirements for the zoning district in which they are located. Exceptions may be granted by the Director of Community Development in an emergency situation for a maximum of 90 days.
    d. There shall be no utilities installed within the Metal Storage Container.
    e. Any deviations from these standards may be approved through the issuance of a Conditional Use Permit per Section 30.4.
2. Temporary Uses in the CG, CH, M1 and M2 Zones
    a. Upon the issuance of a ~~Building~~ **Administrative** Permit, Metal Storage Containers may be established with a temporary use permit. A no fee temporary use permit is required prior to the storage container being located on site and may be issued for up to 18 months at a time. Temporary use permits may be renewed so long as Building Permit remains in active status.
    b. For non-permit projects Metal Storage Containers may be established with a temporary use permit for up to 6 months.
    c. Metal Storage Containers are required to meet all development standards of

the Zoning District in which they are located including Setbacks, Building separation and Structure Height. Exceptions may be granted by the Director of Community Development in an emergency situation for a maximum of 90 days.

d. There shall be no utilities installed within the Metal Storage Container.

3. Permanent Uses in the G, AR, RR and RS Zones

a. One 160 square foot Metal Storage Container may be established with an approved ~~Building~~ **Administrative** Permit subject to the following standards.

1. There shall be no signage on the Metal Storage Container.
2. The only utilities permitted shall be electricity for lights and outlets, i.e. there shall be no plumbing or mechanical. The addition of electricity requires an electric permit.
3. All containers shall be painted and maintained either the primary Structure color or a pre-approved earthtone color consistent with the surrounding terrain prior to placement.
4. Metal Storage Containers are required to meet all development standards of the Zoning District in which they are located including Setbacks, Building separation and Structure Height.
5. Use of the unit is for the storage of personal effects owned by the property owner or tenant. There shall be no commercial use of the unit, for example rental of the unit to people not residing on the property.
6. The unit shall not be used for residential use or for the keeping of animals.
7. Nothing shall be stored on top of the unit.

b. Any deviations from these standards may be approved through the issuance of a Conditional Use Permit per Section 30.4.

c. Metal storage containers existing prior to the adoption of this Ordinance will have until January 1, 2009 to meet these requirements.

4. Permanent Uses in the CG and CH Zones

a. The equivalent of one 320 square foot Metal Storage Container (for example two 8'x20' containers or one 8'x40') may be established with an approved ~~Building~~ **Administrative** Permit subject to the following standards.

1. There shall be no signage on the Metal Storage Containers.
2. Electric utility may be permitted as part of the Building Permit.
3. All containers shall be painted and maintained either the primary Structure color or a pre-approved earthtone color consistent with the surrounding terrain prior to placement.
4. Metal Storage Containers are required to meet all development standards of the Zoning District in which they are located including Setbacks.

b. Any deviations from these standards may be approved through the issuance of a Conditional Use Permit per Section 30.4.

c. Metal storage containers existing prior to the adoption of this Ordinance will have until January 1, 2009 to meet these requirements.

5. Permanent Uses in the M1 and M2 Zones

a. Metal Storage Containers are permitted with an approved Building Permit subject to the following standards.

1. There shall be no signage on the Metal Storage Containers

2. Electric utility may be permitted as part of the Building Permit.

3. All containers shall be painted and maintained either the primary Structure color or a pre-approved earthtone color consistent with the surrounding terrain prior to placement.

4. Metal Storage Containers are required to meet all development standards of the Zoning District in which they are located including Setbacks. Any deviations from these standards may be approved through the issuance of a conditional use permit.

b. Any deviations from these standards may be approved through the issuance of a Conditional Use Permit per Section 30.4.

c. Metal Storage Containers existing prior to the adoption of this Ordinance will have until January 1, 2009 to meet these requirements.

Section 3.11.D: <u>Permits and Administration:</u>

1. **All Metal Storage Containers shall be subject to the issuance of a permit. Issuance may be through the action of the Director of Community Development or the Planning and Zoning Commission.**

a. Establishment of a Metal Storage Container need an Administrative Permit shall be in compliance with the provisions of Section

b. Establishment of a Metal Storage Container requiring issuance of a Conditional Use Permit shall be in compliance with the provisions of Section

Section 3.12.A: Purpose

The purpose of this section is to establish a process, rules and standards for the construction and operation of Accessory Wind Energy Systems used primarily for on-site power consumption.

Section 3.12.B: Applicability ~~Where Allowed~~

1. Accessory Wind Energy Systems shall be considered a permitted use in the following zoned areas G, AR, RR, RS, RM, PC, PRD, PS, RC, CG, CH, MR, MP, M1 and M2 Zones that are a minimum of one acre in size. Roof mounted systems may be permitted in any of the above mentioned zoned areas that are a minimum of one-half acre in size.
2. Any deviation from the required standards of this Ordinance may be approved through the issuance of a Conditional Use Permit per Section 30.4.

Section 3.12.C: Performance Standards ~~and Design Requirements~~

1. The requirements of this Ordinance shall apply to all Accessory Wind Energy Systems proposed after the effective date of this Ordinance.
2. All Accessory Wind Energy Systems shall conform to applicable industry standards, including those of the American National Standards institute.
3. Minimum parcel size of 1 acre is required for the installation of an Accessory Wind Energy System.
4. No more than two systems are permitted per parcel.
5. Maximum height shall be that of the underlying zoning district measured from preexisting natural Grade to the center of the turbine hub for horizontal and vertical systems.
6. Setback requirements shall be 100% of the Total Height of the Accessory Wind Energy System from all property lines, Access Easements, Residential Structures, and public electric power or telephone lines. No part of the wind system Structure, including guy wire anchors, may extend into the minimum Setback area of the underlying zoning district or into any Access or utility Easements
7. All portions of the energy system shall be a non-reflective, non-obtrusive color, subject to the approval of the Community Development Director. The appearance of the turbines, towers and any other related components shall be maintained throughout the life of the wind energy facility pursuant to industry standards.
8. Systems shall not be used for displaying any advertising.
9. Systems shall not be illuminated unless required by a state or federal agency.
10. The electrical collection system shall be placed underground within the interior of each parcel. The collection system may be placed overhead near substations or points of interconnection to the electric grid. All grid connected systems shall have a completed contractual agreement with the local utility prior to the issuance of a Building Permit.

11. Accessory Wind Energy Systems shall be designed, installed, and operated so that noise generated by the system shall not exceed fifty decibels (50 dBA), as measured from the nearest property line, except during short-term events including utility outages and severe wind storms.
12. Obsolescence and Removal

    If the Accessory Wind Energy System remains nonfunctional or inoperative for a continuous period of 120 days, the system shall be deemed to be abandoned and shall constitute a public nuisance. The owner shall remove the abandoned system at their expense after a demolition permit has been obtained. Removal includes the entire Structure including foundations to below natural Grade, and transmission equipment.

Section 3.12.D: Permits and Administration:

Building Permits shall be obtained for any Accessory Wind Energy System prior to installation.

SECTION 3.13: MEDICAL MARIJUANA DISPENSARIES AND OFF-SITE CULTIVATION AND INFUSION FACILITIES

Section 3.13.A: Purpose

The purpose of this section is to establish a process, rules, and standards for the construction, establishment, and operation of Medical Marijuana Dispensaries, and Off-Site Cultivation and Infusion Facilities, pursuant to ARS §36-2806.01.

Section 3.13.B: Applicability ~~Where Allowed~~

1. Medical Marijuana Dispensaries shall be considered a permitted use in the CG-10,000 (Commercial General) and CH-10,000 (Commercial Heavy) Zones or in the PC (Planned Community) Zone in areas designated for development subject to CG-10,000 and CH-10,000 Uses and development standards subject to the following performance standards and design requirements.
2. Medical Marijuana Off-Site Cultivation and Infusion Facilities shall be considered permitted Uses in the M-1-10,000 (Light Industrial), and M-2-6,000 (Heavy Industrial) Zones or in the PC (Planned Community) Zone in areas designated for development subject to the M-1-10,000 and M-2-6,000 Uses and development standards subject to the following performance standards and design requirements. Off-Site Cultivation and Infusion Facilities shall be considered Conditional Uses per Section 30.4 in the CH-10,000 (Commercial Heavy) Zone or in the PC (Planned Community) Zone in areas designated for development subject to CH-10,000 uses and development standards.

Section 3.13.C: Performance Standards ~~and Design Requirements~~

1. Medical Marijuana Dispensaries shall be located in a permanent Building, and may not locate in a trailer, cargo container, or motor vehicle.
2. Medical Marijuana Dispensaries shall have a single secure entrance and shall implement appropriate security measures to deter and prevent the theft of marijuana and unauthorized entrance into areas containing marijuana pursuant to ARS §36-2806(C).
3. Medical Marijuana Dispensaries shall be a maximum of 2,500 gross square feet.
    a. Medical Marijuana Dispensaries and Cultivation/Infusion Facilities shall not be located within 500 feet of a public or private Preschool, kindergarten, elementary, secondary, or high school, place of worship, or public park existing before the date of application for the Medical Marijuana Dispensary or Cultivation/Infusion Facility. This distance shall be measured in a straight line from the exterior walls of the Building or portion thereof in which the business is conducted or proposed to be conducted to the property line of the protected use.
    b. Medical Marijuana Dispensaries and Cultivation/Infusion Facilities shall not be located within 500 feet of another Medical Marijuana Dispensary or Cultivation or Infusion Facility. This distance shall be measured in a straight line between the exterior walls of the Buildings or portions thereof in which the businesses

are conducted or proposed to be conducted.

c. Any Medical Marijuana Dispensaries and Cultivation/Infusion Facilities lawfully operating shall not be rendered in violation of these provisions by the subsequent location of a public or private Preschool, kindergarten, elementary, secondary, or high school, place of worship, or public park.

d. Retail sales and dispensing of Medical Marijuana and related products is prohibited at Off-Site Medical Marijuana Cultivation and Infusion Facilities.

e. Operating hours of Medical Marijuana Dispensaries are limited to 8:00 am to 8:00 pm.

f. Drive-through services are prohibited.

g. There shall be no emission of dust, fumes, vapors, odors, or hazardous waste into the environment from any facility where Medical Marijuana Cultivation or Infusion occurs.

h. Marijuana remnants and byproducts shall be secured and properly disposed of and shall not be placed within the facility's exterior refuse containers.

i. Medical Marijuana Cultivation and Infusion may occur within a Medical Marijuana Dispensary. Otherwise, a Medical Marijuana Dispensary may have one additional location where Cultivation, Infusion, and production of Medical Marijuana products occurs pursuant to ARS §36-2804(B)(1)(b)(ii).

Section 3.13.D: <u>Permits and Administration:</u> ~~Required~~

1. **Establishment of a Medical Marijuana Dispensaries and Cultivation/ Infusion Facility shall require issuance of an Administrative Permit in compliance with the provisions of Section**
2. Where Medical Marijuana Dispensaries and Cultivation/Infusion Facilities are classified as a permitted Use, an administrative permit shall be obtained prior to establishment of the Use **and in compliance with the provisions of Section**. To obtain an administrative permit, an applicant must comply with paragraphs 3-10 of this section.
3. Where Medical Marijuana Cultivation/Infusion Facilities are classified as a Conditional Use, a Conditional Use Permit shall be obtained prior to establishment of the Use per Section 30.4. The standard conditional use permit application procedures and requirements shall be met along with additional requirements contained herein.
4. The applicant shall provide the name and location of the Medical Marijuana Dispensary. For an Off-Site Cultivation and/or Infusion Facility, the applicant shall provide the name and location of the dispensary with which it is associated.
5. The applicant shall provide a copy of their dispensary registration certificate issued by ADHS pursuant to ARS §36-2804(B) and a copy of the operating procedures adopted pursuant to ARS §36-2804(B)(1)(c) along with a Site plan, floor plan, and security plan.
6. If the dispensary and/or cultivation/infusion facility is proposed to be located in an existing Building, the applicant shall obtain a Building Permit for change of occupancy

with plans prepared by a professional architect registered in the State of Arizona.

7. A Medical Marijuana Dispensary or Infusion Facility that incorporates Medical Marijuana by means of cooking, blending, or incorporation into consumable/edible goods shall obtain applicable food service permits from the County Health Department.
8. If the measured distance is within 25 feet of the required limits identified in Sections 14.9.D.4 & 5 above, a survey sealed by a registered land surveyor may be required, at the discretion of the Director of Community Development and at the applicant's expense, to verify the required separation.
9. Permits may be denied if the applicant, in the reasonable opinion of the Director of Community Development, is failing to comply with any applicable state or local law or regulation.

Section 3.14.A: Purposes

This section is intended to limit the number and extent of Nonconforming Situations by prohibiting or limiting their enlargement, their reestablishment after abandonment, and the alteration or restoration after destruction. The overall purpose is the gradual elimination of Nonconforming Uses or conversion to conforming Uses in order to further the goals of the Coconino County Comprehensive Plan, special area plans, and this Ordinance.

Section 3.14.B: Applicability

1. Continuation of Nonconforming Situations
    a. Nonconforming Situations that were lawful when created or established may be continued.
2. Completion of Nonconforming Projects
    a. Nonconforming Projects which have been approved or permitted before the effective date of this Ordinance or any amendment thereto or of any zoning map change may be completed in accordance with the terms of their permits, so long as these approvals or permits were validly issued and remain unrevoked and unexpired.
    b. Nonconforming Projects approved by conditional use permit shall be allowed to be completed so long as the Use is commenced or a Building Permit is obtained within one (1) year of approval as per Section 29.2-11.
    c. Applicable zoning regulations for a Nonconforming Project are those in place at the time of a Building Permit application or at the time of application for a zone change or conditional use permit.
    d. For projects designed to be completed in stages, construction may be completed according to regulations in effect on the date of approval pursuant to schedules of development approved by the Planning and Zoning Commission or Board of Supervisors.

Section 3.14.C: Performance Standards

1. Nonconforming Lots
    a. Lots that were legally established and in conformance with the Zoning Ordinance when created shall be considered usable.
    b. When the Use proposed for a Nonconforming Lot is one that conforms in all other respects but the applicable Setback requirements cannot be reasonably complied with, the Board of Adjustment may grant Variances from the applicable Setback requirements if it finds that:

1. The property cannot reasonably be developed for the use proposed without such Variance,
2. The Variance is necessitated by the size and shape of the Nonconforming Lot, and
3. The property can be developed as proposed without any significantly adverse impact on surrounding properties or the public health or safety.

c. For the purpose of Section B above, compliance with applicable Building Setback requirements is not reasonable possible if a Building that serves the minimal needs of the Use proposed for the Nonconforming Lot cannot practicably be constructed and located on the Lot in conformity with such Setback requirements. However, mere financial hardship does not constitute grounds for finding that compliance is not reasonably possible.

d. This section only applies to undeveloped Nonconforming Lots. A Lot is undeveloped if it has no substantial Structures on it. A change in Use of a developed Nonconforming Lot may be accomplished in accordance with Section 29.9 below.

2. Nonconforming Signs

a. Subject to the remainder of this Section, Nonconforming Signs that were lawful when established may be continued.

b. No Nonconforming Sign may be enlarged or altered in such a manner as to increase the extent of the nonconformity nor may illumination be added to any Nonconforming Sign.

c. A Nonconforming Sign may not be moved or replaced except to bring the Sign into complete conformity with this Ordinance.

d. Restoration of a damaged Sign may be accomplished in accordance with Section 29.8 below.

e. The message of a Nonconforming Sign may be changed so long as this does not create any new nonconformities (for example, by creating an Off-Premise Sign where such Sign would not be allowed).

f. Routine maintenance and repairs may be done so long as the cost of such work does not exceed 50 percent of the value of such Sign within any 12 month period.

g. If a Nonconforming Sign advertises a business, service, commodity, accommodation, attraction, or other enterprise or activity that has not been offered or conducted for a period of 180 days, that Sign shall be considered abandoned and shall be removed within 30 days after such abandonment. If the business is resumed following the abandonment, all Signs shall conform to this Ordinance.

h. If a nonconforming Billboard remains blank for a continuous period of 180 days, that Billboard shall be deemed abandoned and shall be removed within 30 days after such abandonment. For the purpose of this Section, a sign is blank if:

1. It advertises a business, service, commodity, accommodation, attraction, or other enterprise or activity that is no longer operating or being offered or conducted; or
2. The advertising message it displays becomes illegible in whole or substantial part; or
3. The advertising copy paid for by a party other than the Sign owner or promoting an interest other than the rental of the Sign has been removed.

3. Nonconforming Mobile Homes and Mobile Home Parks
   a. Within nonconforming Mobile Home Parks, Mobile Homes may be replaced subject to the following:
      1. The total number of spaces in the Mobile Home Park shall not be increased over the number existing at the time the park became nonconforming;
      2. There shall be a minimum 10' Front Setback; and
      3. There shall be a minimum 10' spacing between Mobile Homes.
      4. Setbacks around the perimeter of the park shall not be reduced from those existing at the time the park became nonconforming.
   b. Expansions of nonconforming Mobile Home Parks may only be accomplished through rezoning to the Mobile Home Park Zone for the proposed expansion area.
   c. Individual nonconforming Mobile Homes on discrete parcels may only be replaced with the granting of a conditional use permit as described in Section 29.9 below. Minor additions or improvements, such as decks, porches, and cabanas with a cost up to 25 percent of the appraised value of the nonconforming Mobile Home, are permitted.

4. Extension or Enlargement of Nonconforming Situations
   a. Except as otherwise specifically allowed in this Section, no increase in the extent of nonconformity of a Nonconforming Situation is permitted. In particular, no Nonconforming Use shall be enlarged or extended in such a way as to occupy any part of the Structure or site or another Structure or site which it did not occupy at the time it became a Nonconforming Use, or in such a way as to displace any conforming Use occupying a Structure or site, except as permitted in this Section.
   b. No Nonconforming Use or Structure shall be enlarged or extended so as to increase the nonconformity with respect to Setbacks, height, density or number of units, distance between Structures, parking or other requirements such as performance standards.
   c. Extension of hours or seasons of use, addition of new Uses, and changes in character of the Nonconforming Use are considered to be extensions and are not permitted.
   d. Pursuant to Arizona Revised Statutes § 11-830, within any zoning district, subject to the granting of a conditional use permit, a nonconforming business

Use may expand if such expansion does not exceed one hundred percent of the area of the original business. Such expansions shall be limited to Uses of the same basic nature and character. Expansion shall be limited to the original parcel on which the Use was located at the time it became nonconforming. For Uses within a Structure, the expansion shall be measured by floor area. For business Uses not involving a Structure, for example junk yards, truck yards, or contractors' yards, area shall be strictly construed to mean the square footage or acreage of the Use at the time it became nonconforming.

5. Repair, Maintenance, and Reconstruction

   a. Minor repairs and routine maintenance of property where Nonconforming Situations exist are permitted and encouraged. Major renovation, i.e. work estimated to cost more than 25% of the appraised value of the Structure to be renovated, may only be done with the granting of a conditional use permit. Cost shall mean the fair market value of the materials and services necessary to accomplish the repair or maintenance.

   b. If a Structure located on a parcel where a Nonconforming Situation exists is damaged to an extent of 50% or less of the appraised value of the damaged Structure, then it may be repaired and replaced and the Nonconforming Use may be resumed, provided that restoration is started within one year and diligently pursued to completion. For damaged Nonconforming Signs, restoration must be initiated within three (3) months and completed within six (6) months. If the damage exceeds 50% or the Structure is voluntarily razed or is required by law to be razed, the Structure shall not be restored except in full conformity with the regulations for the zone in which it is located, and the Nonconforming Use shall not be resumed. Structure as used in this paragraph includes on-premise Signs and Billboards. Nonconforming Structures used for single family residential purposes, if damaged to an extent exceeding 50% may be reconstructed and restored subject to the granting of a conditional use permit.

   c. For the purpose of paragraph B above, the extent of damage shall be based on the ratio of the estimated cost of restoring the Structure to its condition prior to such damage or partial destruction to the estimated cost of duplicating the entire Structure as it existed prior to the damage. Estimates for this purpose shall be reviewed and approved by the Director of Community Development or the Chief Building Official and shall be based on the minimum cost of construction in compliance with adopted building codes.

Section 3.14.D: <u>Permits and Administration</u>

1. Change in Use of Property Where a Nonconforming Situation Exists

   a. A change in Use of property where a Nonconforming Situation exists to a principal Use that is permissible in the zone in which the property is located shall be accomplished in the same manner as establishing the Use on a vacant Lot. Once conformity with this Ordinance is achieved, the property may not revert to its nonconforming status.

b. If the change is to a permissible Use, but all requirements of this Ordinance, for example property development and performance standards, cannot be met then the change may be allowed subject to the Board of Adjustment granting a Variance for the waivers. In addition to other findings required for a Variance, the Board must find that:

1. The change will not result in a Violation of Section 29.7; and
2. All of the requirements that can reasonably be met will be met. Compliance is not reasonably possible if compliance cannot be achieved without the addition of land or without moving a substantial Structure that is on a permanent foundation. Mere financial hardship related to such requirements as paving a parking lot may not constitute grounds for granting a Variance.

c. A change from one Nonconforming Use to another principal Use that is also nonconforming may be permissible with the granting of a conditional use permit. The permit may be granted if the findings in Section B above are met and if the proposed development will have less of an impact on the area and will be more compatible with the surrounding neighborhood than the Use in operation at the time the permit is applied for. Applications for a change shall be restricted to the property, i.e. the specific parcel, on which the Nonconforming Use is located.

2. Nonconforming Uses Authorized by Conditional Use Permits

a. Uses approved by conditional use permit which have become nonconforming because of a Zoning Ordinance text amendment or a zoning map change may continue until the expiration date of the permit. At that time the Planning and Zoning Commission may grant a use permit for renewal if all of the original conditions of approval have been met, even if the Use is no longer a permitted or conditional use in the zoning district in which the property is located. The Commission may impose reasonable improvements to bring the property into closer conformity or to mitigate the Use.

b. Whenever a Nonconforming Use has been discontinued, or changed to a conforming Use, for a consecutive period of 180 days, Use of the Structure or Site thereafter shall be in conformity with the regulations for the zone in which the property is located.

SECTION 3.15: WALLS AND FENCING

Section 3.15.A: Purpose

Section 3.15.B: Applicability

1. ~~Walls and Fences: G, AR, and RR, RS, RM, Commercial, Industrial, MHP and RMH~~ **All** Zones
2. The provisions of this Section shall not apply to a wall or fence required by any law or regulation of the State of Arizona or any agency thereof.

Section 3.15.C: Performance Standards

1. In any required Front or Street Side Setback, an opaque or solid wall or fence shall not exceed three (3) feet in height. Non-opaque fences, which are at least 50% transparent, may be established in any required Front or Street Side Setback to a maximum height of six (6) feet.
2. A wall or solid fence not more than six (6) feet in height, as measured from the highest adjacent Grade, may be maintained along the interior side or rear lot lines provided that such wall or solid fence does not extend into a required Front or Street Side Setback. Stacking firewood along a property line shall be considered a wall or fence and must meet height limits.
3. A wall or fence adjacent to a driveway providing vehicular Access to an Abutting Lot shall not exceed three feet in height within fifteen (15) feet of the intersection of said driveway and the Street Right-of-Way so as not to obstruct visibility.
4. Tires may not be used to construct walls, unless they are fully encapsulated so as to prevent the accumulation of water inside the tires, and subject to the granting of a Building Permit.
5. **Industrial Zones allowances**

   Barbed wire, electrical fences, broken glass or other similar hazardous on top of walls and fences in Industrial Zone may be permitted subject to the approval of the Director of Community Development.

Section 3.15.D: Permits and Administration:

1. **Applicable Building, Environmental Quality and Engineering Permits apply. Planning and Zoning review shall be conducted through the issuance of such permits.**
2. Walls or fences exceeding six (6) feet in height may be permitted only through the Variance or Administrative Adjustment procedure set forth in Section 30 and subject to the granting of a Building Permit.

Section 3.16.A: Purpose

Section 3.16.B: Applicability

Section 3.16.C: Performance Standards

1. Residential **(PRD)**

   In all Residential Zones, outdoor storage of unlicensed or inoperable vehicles, vehicle parts, auto parts, tires, secondhand building material, pipe, drums, appliances, household furniture, household refuse, unlicensed Travel Trailers or utility trailers, etc., shall be permitted subject to the following conditions:

   1. For any Lot or parcel of land, the area permitted for the above described outdoor storage shall be 200 square feet. An additional 100 square feet of outdoor storage per acre for properties larger than one acre, shall be permitted up to a maximum of 2000 square feet.
   2. On any Lot or parcel of land, all outdoor storage shall be located to the rear of the property and screened from neighboring properties and roadways by a wall; opaque, rigid fencing; Landscaping; or other Structure. Second-hand materials may not be used for the construction of such screening unless otherwise approved by the Community Development Director. Any wall or fencing shall not exceed six (6) feet in height and shall be subject to the provisions of Section 18.7. Stored secondhand materials, vehicles, vehicle parts, etc., shall not be stacked so as to be visible above the required screening, or more than six (6) feet high. The provisions of this paragraph shall not be construed to restrict the storage of firewood maintained for personal use by the occupant of the premises.
   3. All permitted screened outdoor storage areas shall meet the minimum required Building Setbacks as prescribed by this Section.
   4. Outdoor storage shall not be permitted on any parcel unless there is a Dwelling on the parcel.
   5. Temporary storage of construction materials shall be permitted on any Lot or parcel of land provided such materials are being used in conjunction with a valid construction project on that Lot or parcel.
   6. In the MHP Zone, outdoor storage of unlicensed or inoperable vehicles, vehicle parts, auto parts, tires, second-hand Building materials, pipe, drums, appliances, household furniture, household refuse, unlicensed Travel Trailers or utility trailers, etc. shall be subject to the following conditions:
      i. A maximum area of 200 square feet may be used on any one Lot or Manufactured Home Space for outdoor storage.
      ii. Such outdoor storage shall be located to the rear of the main Dwelling

2. **Commercial**

   The outdoor storage of any items, including but not limited to items for sale, unlicensed and/or inoperable vehicles, Travel Trailers, boats, Recreational Vehicles, or secondhand materials is prohibited, unless a Conditional Use permit is approved by the Planning and Zoning Commission for said outdoor storage.

3. Industrial

   The outdoor storage of any items, including but not limited to items for sale, unlicensed and/or inoperable vehicles, Travel Trailers, boats, Recreational Vehicles, or secondhand materials is prohibited, unless a Conditional Use permit is approved by the Planning and Zoning Commission for said outdoor storage.

4. **Special Purpose** ~~PS/OS~~

   Screening and Landscaping requirements for a Conditional Use shall be specified in the use permit.

Section 3.16.D: <u>Permits and Administration:</u>

1. **Applicable Building, Environmental Quality and Engineering Permits apply. Planning and Zoning review shall be conducted through the issuance of such permits**
2. **Establishment of Storage and Screening requirements through the issuance of a Conditional Use Permit shall be in compliance with the provisions of Section**

Section 3.17: Amateur (HAM) Radio Towers

Section 3.17.A: Purpose

Section 3.17.B: Applicability

Amateur (HAM) Radio Towers shall be permitted for the personal use of the property owner/resident **in Residential Zones** and subject to the following **Performance Standards** ~~provisions~~

Section 3.17.C: Performance Standards

1. Towers shall not project more than 65 feet above Grade; establishment of towers above this limit but less than 100 feet in height may be permitted only through the Variance procedure set forth in Section 30. The height of extension antennas shall be determined in their cranked-down position and shall remain in said position except during use.
2. Towers shall meet the minimum Setback requirements for the zone in which they are located; no portion of any antenna array shall extend beyond the property lines.

Section 3.17.D: Permits and Administration

It shall be the responsibility of the property owner to demonstrate that the site is adequate in size to contain debris resulting from tower failure and that such failure will not present a safety hazard to adjoining properties.

SECTION 3.18: ~~Animal Husbandry Activities or Projects~~

1. ~~FFA, 4-H or any Agricultural or recognized Animal Husbandry activity or project conducted primarily for educational purposes or school credits, may be permitted in any zone.~~
2. ~~The following criteria shall be met:~~
    a. ~~Active membership, including enrollment in the specific Livestock project, must be maintained, the project must be operated in compliance with all requirements of the organization having jurisdiction over the project, and verification of such shall be required.~~
    b. ~~The keeping of all animals shall be subject to The Rules and Regulations of the Coconino County Health District, Sections 11-1 (General), 11-2 (Piggeries) and 11-3 (Sanitary Requirements), as applicable.~~
    c. ~~Under this exemption the Setback and number of animals per acre do not apply for animals utilized in Animal Husbandry projects. However, the Setback exemption shall not apply to any piggery, which is required by The Rules and Regulations of the Coconino County Health District to be located at least three hundred (300) feet from an inhabited house on an adjoining property.~~
    d. ~~An application for the Animal Husbandry exemption must be approved by the Department of Community Development before more animals than the number permitted in the zoning district are brought to the property, or before any required Setbacks are waived.~~
    e. ~~The Setback exemption and/or the number of animals per acre exemption may be revoked by the Director of Community Development if the Animal Husbandry activity or project is found to be out of compliance with any rules or regulations of the organization having jurisdiction over the project (i.e. The University of Arizona Cooperative Extension, etc.). The finding of said lack of compliance must be made by the organization with jurisdiction.~~
    f. ~~The Setback exemption and/or the number of animals per acre exemption may be revoked by the Director of Community Development if a violation of Section 11-1, Section 11-2, or Section 11-3 of The Rules and Regulations of the Coconino County Health District is found to exist on the property. The finding of a violation must be made by the Coconino County Hearing Officer for Environmental Services.~~
    g. ~~The Setback exemption and/or the number of animals per acre exemption may also be revoked by the Director of Community Development if a violation of Coconino County Ordinance Number 96-01 (Cruelty to Animals), or a violation of ARS § 13-2910 (Cruelty to Animals) is found to exist on the property. The finding of a violation must be made by a Justice of the Peace.~~
    h. ~~A revocation of an exemption may be appealed to the Planning and Zoning Commission. A written appeal must be filed within thirty (30) days of the revocation.~~

i. ~~A decision by the Planning and Zoning Commission may be appealed to the Board of Supervisors. A written appeal must be filed within fifteen (15) days of the Commission's decision.~~

Chapter 4. Performance Standards

Section 4.1.A: Purposes

1. In order to alleviate or to prevent traffic congestion and shortage of curb spaces, off-street parking facilities shall be provided incidental to new Uses and major alterations and enlargements of existing Uses. The number of Parking Spaces prescribed in this Section, shall be in proportion to the need for such facilities created by the particular type of Use. Off-street parking is to be laid out in a manner that will ensure its usefulness, protect the public safety, and, where appropriate, insulate surrounding land Uses from its impact.

Section 4.1.B: **Applicability** ~~Basic Requirements for Off-Street Parking~~

1. Off-street parking shall be provided for any new Building constructed and for any new Use established; for any addition or enlargement of an existing Building or Use; and for any change in the occupancy of any Building or the manner in which any Use is conducted that would result in additional Parking Spaces being required, subject to the provisions of this Article.
2. No existing Use of land or Structure shall be deemed to be nonconforming solely because of the lack of off-street parking facilities prescribed in this Section, provided that facilities being used for off-street parking on the effective date of this Ordinance shall not be reduced in capacity to less than the minimum standards prescribed in this Article.
3. For additions or enlargements of existing Buildings or Uses, or any change of occupancy or manner of operation that would increase the number of Parking Spaces required, the additional parking shall be required only for such addition, enlargement, or change and not for the entire Building or Use, provided that no additional parking shall be required where the total number of spaces prescribed for the addition, enlargement, or change is less than 10 percent of the number of spaces prescribed for the use as conducted prior to such addition, enlargement or change.
4. Parking required by this Section for any Building or Use shall not be considered as providing parking for any other Building or Use, except where a joint parking facility serves more than one Building or Use or where the Planning and Zoning Commission determines that overlapping parking requirements will not conflict with each other.
5. All off-street Parking Spaces and Areas required by this Section shall be maintained for the duration of the Use requiring such areas. Required Parking Spaces and Areas shall not be used for the sale, display or repair of motor vehicles or other goods and services.
6. No Use shall be required to provide more spaces than prescribed by this Section or prescribed by any conditional use permit.

Section 4.1.C: **Performance Standards** ~~Parking Spaces Required~~

1. General
    a. In the CN Zone, off-street parking for a shopping center shall be provided on the same Site at a ratio of 5 spaces for each 1,000 square feet of gross floor area.

b. In all residential zones, for residential uses, off-street parking shall be provided in accordance with Section 19.2.B.

c. In all other zones and for all other Uses, off-street parking shall be provided in accordance with the standards prescribed in Section 25.2.B. The requirement for any Use not specifically listed shall be determined by the Director of Community Development on the basis of the requirement for similar Uses.

d. Where the application of the off-street parking requirements result in a fractional number of spaces, a fraction of one-half or greater shall be resolved to the next higher whole number.

e. All required off-street Parking Spaces shall be located on the same Lot as the Use to be served unless a joint parking facility or parking district is established and approved by the Planning and Zoning Commission.

2. Schedule of Off-Street Parking Requirements

Use	Minimum Off-Street Parking Required
Art gallery	1 space for each 250 square feet of gross floor area.
Automobile, boat, camper, or similar vehicle sales, display or rental uses	1 space for each 500 square feet of gross floor area, but not less than 5 spaces.
Automobile car wash	Spaces or reservoir parking equal to 5 times the capacity of the car wash.
Bank, financial institution, public or private utility office	1 space for each 200 square feet of gross floor area.
Barber or beauty shop	1 space for each 200 square feet of gross floor area.
Bed and Breakfast Establishment	1 space for each guest room plus 2 spaces for permanent residents.
Boarding or rooming house	1 space for each guest room or guest dwelling.
Bowling alleys	3 spaces for each alley
Camp	1 space for each employee on largest shift plus one space for each camp vehicle normally parked on the premises plus 1 visitor space for each 10 campers.
Church, chapel, or mortuary	1 space for each 3 seats in the main assembly room; or 1 space for each 20 square feet in the main assembly room.
Cleaning or laundry use or similar personal service use	1 space for each 250 square feet of gross floor area.
Clubs or lodges	1 space for each 3 seats in the main assembly room; or 1 space for each 20 square feet in the main assembly room.

Use	Minimum Off-Street Parking Required
College, or university, including auditoriums, stadiums and housing facilities; vocational schools	.75 space for each full-time equivalent student, less the number of spaces provided for on-campus housing facilities according to this schedule.
Commercial service uses, repair shops, area garages, wholesale uses	1 space for each 200 square feet of gross floor (including display).
Community Center	1 space for each 250 square feet of gross floor area or 1 space for each 4 patrons to the maximum capacity plus one space for each employee on the largest shift.
Contractor's Yard	2 spaces plus one space for each employee.
Convalescent Home	1 space for each 3 patient beds.
Convenience Markets	1 space for each 200 square feet of gross floor area.
Country club, swim club or recreation use	1 space for each 3 persons based on the maximum anticipated capacity of all facilities capable of simultaneous use as determined by the Director of Community Development.
Dormitories and other student housing	2 spaces for each three guest rooms.
Drive-in Restaurants	1 space for each 100 square feet of gross floor area, but not less than 10 spaces for each such establishment.
Elementary or junior high school	2 spaces for each teaching station.
Fire station	1 space for each 200 square feet of gross floor area.
Food store, supermarket or similar use	1 space for each 150 square feet of gross floor area(including display).
Furniture or appliance stores	1 space for each 750 square feet of sales display area.
Government Buildings	1 space for each 200 square feet in addition to the parking required for employees.
High school, including auditoriums and stadiums on site	7 spaces for each teaching station.
Horse stable	1 space for each employee plus 1 space for each 4 stalls.
Hospital	1 space for each two patient beds.
Hotels and Motels	1 space for each guest room.
Kennel	1 space for each employee plus one space for each 1,000 square feet but no less than 4 spaces.

Use	Minimum Off-Street Parking Required
Manufacturing or industrial Uses, including office or other incidental operations on the site	2 parking spaces for each 3 employees, but in no event less than 2 spaces for each 1,000 square feet of gross floor area.
Medical or dental office	5 spaces for each doctor.
Mineral extraction operations	1 space for each employee on the maximum shift.
Other business, technical service, administrative or professional office or commercial Building	1 space for each 250 square feet of gross floor area.
Plant nursery, garden shop	5 spaces plus additional space for each 1,000 square feet of sales or display area.
Post office	1 space for each employee plus 1 space for each 500 square feet of gross floor area.
Pre-school	1 space for each staff member plus one space for each 10 students.
Recycling center	1 space for each employee plus 1 space for each 500 square feet of gross floor area.
Restaurant, cocktail lounge, or similar Use for sale or consumption of food or beverage	1 space for each 100 square feet of gross floor area, but not less than 10 spaces for each such establishment.
Retail, general	1 space for each 200 square feet of gross floor area.
Retail, outdoor	1 space for each 500 square feet of open sales and display area plus one space for each employee.
Retail, showroom	1 space for each 500 square feet of showroom/display area plus 1 space for each employee; additional parking required for associated Warehouse area.
Self-service storage	2 spaces plus 1 space for each 100 units.
Theater or auditorium not on a school site	1 space for each 3 seats in main assembly room; or 1 space for each 20 square feet in main assembly room.
Skating rinks	1 space for each 3 seats; or 1 space for each 50 square feet of rink area.
Warehouse and distribution industry	2 parking spaces for each 3 employees, but in no event less than 1 space for each 2,000 square feet for the first 20,000 square feet; 1 space for each 4,000 square feet of floor area of the remaining Building area. If there is more than 1 shift, the number of employees on the largest shift may be used in determining parking requirements.

Use	Minimum Off-Street Parking Required

3. Site Development Standards for Off-Street Parking Areas

   a. Each off-street Parking Space shall consist of a rectangular area not less than 9 feet wide by 18 feet long, together with drives, aisles, turning and maneuvering areas and having access at all times to a public Street or Alley. All parallel parking stalls shall be a minimum of 8 x 24 feet.

   b. Landscaping shall be provided for each off-street Parking Area as required by Section 28: Landscaping.

   c. Any unused space resulting from the design of the parking area shall be used for landscape purposes.

   d. All required landscaped areas shall be provided with a permanent and adequate means of irrigation and shall be adequately maintained.

   e. All off-street Parking Areas, except for single family Dwellings, shall be constructed and maintained to provide the following:

      1. Grading, drainage, and a minimum of two inches of asphaltic concrete paving over a four inch aggregate base or other acceptable paving design prepared by a registered professional engineer to the specifications of the County Engineer unless a paving waiver is approved by the Planning and Zoning Commission or a Variance is granted by the Board of Adjustment.

      2. Internal spacing, circulation, and dimensions as indicated on the sample parking lot plan (see page 15-8).

      3. Bumpers, wheel stops, stall markings and other vehicular controls to the specifications of the Director of Community Development.

      4. Where provided parking lot lighting shall meet the requirements of Section 17: Lighting.

      5. Drainage shall be provided to the specifications of the County Engineer.

      6. Parking lot turn-outs shall be a minimum of 100 feet from the nearest street intersection.

   f. Parking Area design dimensions shall be as follows: (See sample parking lot plan.)

      1. In the event practical difficulties and hardships result from the strict enforcement of the following standards due to existing permanent Buildings or an irregularly shaped parcel, an administrative Variance by the Director of Community Development may be given for Standards Nos. 1 through 4 inclusive, not to exceed ten (10) percent.

      2. ~~Note:~~ The number in the left-hand column of the following listing refers to the numbers on the attached sample parking lot plot plan.

         1. 30° 45° 60° 90°

2.	16’	17’	18’	18’
3.	14’	16’	19’	24’
4.	46’	50’	55’	60’

5. 14’ for one-way traffic; 24’ for two-way traffic (two-way aisles shall be permitted only on 90 degree parking designs).
6. Islands shall have a maximum length of 180 feet.
7. Islands shall have a minimum width of 5 feet. The minimum average width of islands at the extremities of 90 degree parking islands shall be 5 feet.
8. Curbs shall be installed at a minimum of 5 feet from walls, fences, Buildings or other **S**tructures. This requirement excepts driveways that are not a part of the maneuvering area for parking. A curb shall be installed a minimum of three feet (3’) from the edge of driveways that are parallel to block walls or fences.
9. Curb radius shall be 3 foot minimum.
10. Driveway widths shall be 24 feet minimum and constructed to County standards.
11. First Parking Space shall be 10 feet minimum distance from Front and Street Side Property Lines.
12. Walk openings four feet (4’) wide shall be permitted in the island every 5 spaces.
13. All parallel parking stalls shall be a minimum of 8 x 24 feet.

g. Where off-street parking facilities are provided but not required by Section 25, such facilities shall comply with the development standards of this Section.

h. Loading spaces shall be provided to the specifications of the Director of Community Development.

i. Parking for the handicapped shall be provided in accordance with the requirements of all applicable laws.-

j. At the discretion of the Planning and Zoning Commission, designated bus parking may be required for Uses subject to tour bus traffic. Where required, minimum dimensions for bus parking spaces shall be 12 x 42 feet for angle parking and 10 x 48 feet for parallel parking.

k. At the discretion of the Planning and Zoning Commission, off-street parking facilities providing more than forty (40) parking spaces may contain an on-site traffic circulation and parking plan to accommodate both full-size and compact car spaces. Said optional parking plans shall meet the following criteria:

1. Not more than 40% of the total number of parking spaces shall be designed for compact and sub-compact vehicles.
2. Compact spaces must be designed for 90 degree parking and located opposite a 45 degree or 30 degree full-sized aisle and parking stall.
3. Compact car parking spaces shall measure at least 8 feet by 15 feet in size.

Section 4.1.D: <u>Permits and Administration</u>

Applicable Building, Environmental Quality and Engineering Permits apply. Planning and Zoning review shall be conducted through the issuance of such permits.

Section 4.2.A: Purpose

1. The location, height, size, and illumination of Signs are regulated in order to maintain the attractiveness and environmental qualities of the County; to protect business sites from loss of prominence resulting from excessive Signs on nearby sites; and, to protect the public safety and welfare.

Section 4.2.B: Applicability

1. Exempt Signs

   The following Signs shall be exempt from the provisions of this Section:

   1. Official notices authorized by a court, public body, or public safety official.
   2. Directional, warning or information Signs authorized by federal, state or municipal authority.
   3. Memorial plaques and Building cornerstones when cut or carved into a masonry surface or when made of incombustible material and made an integral part of the Building or Structure.
   4. Commemorative symbols, plaques and historical tablets.
   5. Political Signs; provided, however, that such Signs shall be displayed no more than sixty (60) calendar days prior to the election to which they refer, and shall be removed within three (3) calendar days following the date of the election to which they refer. Signs shall not exceed sixteen (16) square feet in residentially zoned areas or a maximum of thirty-two (32) square feet in all other areas.

2. **Prohibited Signs**

   The following special purpose signs shall be prohibited:

   1. Billboards
      i. Billboards and off-premise Signs shall not be permitted in any zone. All existing Billboards and off-premise Signs are Nonconforming Uses subject to the provisions of Section 29 of this Ordinance.
      ii. If any Billboard contains copy advertising a Use, business or product no longer in existence, or is left blank, or is maintained without paid copy for a period of 180 days or more, such Billboard shall be removed immediately unless a conditional use permit is approved for its reuse.
   2. Portable Signs

      Portable and sandwich board Signs are prohibited. Temporary real estate "open house" Signs shall be exempt.
   3. Vehicle Signs

      Signs painted on or attached to vehicles parked on public or private

premises that are displayed in view of vehicular or pedestrian traffic for a period in excess of twenty-four (24) hours shall be prohibited.

Section 4.2.C: **Performance Standards** ~~General Provisions~~

1. All Signs

    a. All Sign illumination shall be from the interior or from top mounted, downward directed flood light projection. Signs may not be illuminated between the hours of 9:00 PM and sunrise, unless the Use they advertise is open to the public during those hours. If illumination is provided, all lights must be installed and used in conformance with Section 27: Lighting of this Ordinance.

    b. No Sign shall rotate or simulate movement by means of fluttering, spinning or reflective devices.

    c. No Sign may encroach upon or overhang any adjacent property or any public Right-of-Way. No Sign shall be attached to any utility pole, light standard, tree or any other public facility. No Sign may be placed in any public Right-of-Way or Easement.

    d. Canopy Signs shall not project above the canopy; Signs attached to a Building shall not project above the eave line except as approved by the Planning and Zoning Commission.

    e. The square footage of a Sign made up of letters, words, or symbols within a frame shall be determined from the outside edge of the frame itself. The square footage of a Sign composed of only letters, words, or symbols shall be determined from imaginary straight lines drawn around the entire copy or grouping of such letters, words, or symbols. Only those portions of the construction elements that are an integral part of the Sign itself shall be considered in the allocation of square footage allowed.

    f. All Signs shall be structurally safe and shall be maintained in good condition in the opinion of the Director of Community Development and the Chief Building Official. Furthermore, it shall be the responsibility of the owner of the land and/or improvements to remove any Sign or Signs on premises where the use has been discontinued for a period of ninety (90) days.

    g. All Signs, together with all of their supports, braces, guys and anchors shall be kept in good condition. The display surfaces of all Signs shall be kept neatly painted or posted at all times. Also, all weeds shall be removed periodically as necessary. The Community Development Director may order the removal of any sign not in conformance with the provisions of this Section.

    h. No cloth, paper, plastic or similar Advertising Signs or Devices other than in rigid frames as provided herein shall be permitted.

    i. For retail commercial Uses in any zone where such Uses are listed as permitted or conditional Uses, Window Signs may be permitted. Signage exceeding 25% of the window area is prohibited. Window Signs above the ground floor shall be

SUGGESTED PARKING
(TYPICAL PLOT PLAN)

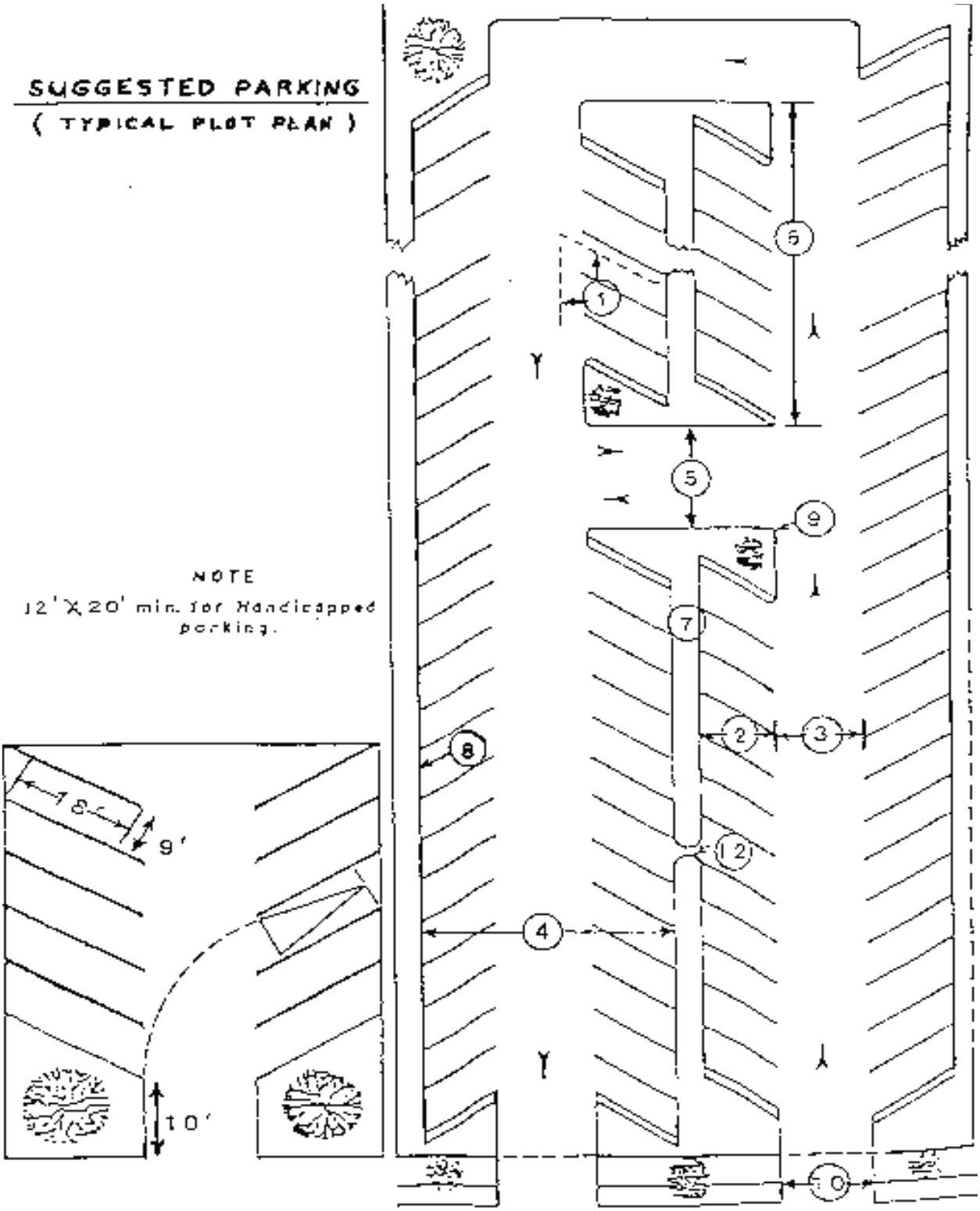

considered equivalent to a wall Sign and shall be included in the overall signage calculation.

j. No roof Signs shall be permitted. However, where no Building Setback is provided, roof Signs may be permitted subject to the approval of the Planning and Zoning Commission.

k. Projecting Signs shall not extend out more than thirty-two (32) inches from the wall to which they are attached, and shall not exceed ten (10) square feet in area. A minimum of eight (8) feet of clearance between the ground and the bottom edge of the Sign shall be provided.

l. No person shall exhibit, post or display upon any Sign or wall any statement, symbol or picture of an obscene nature.

m. No person, firm or corporation shall erect, construct, enlarge, modify or relocate any Sign in the County without first obtaining a Building Permit, as applicable, for each such Sign. Where said Sign is electrical or illuminated by electricity, a separate electrical permit shall be obtained.

n. Signs shall not blink, flash, or be animated by lighting in any fashion. Electronic reader board copy shall not be changed more than once in 24 hours.

o. The operation of searchlights or similar lighting sources for advertising, display or any other commercial purpose is prohibited.

p. No Sign shall be located in such a manner as to obstruct or otherwise interfere with an official traffic Sign, signal, or device or obstruct or interfere with a driver's view of approaching, merging or intersecting traffic. A clear sight triangle shall be maintained at all street intersections and driveway entrances. Such clear sight triangle shall be determined by measuring twenty-five (25) feet along each property line at Street intersections, and along the property line and the driveway for driveway entrances. Signs that are to be located in such clear sight triangle shall not exceed three feet in height.

q. Signs that are placed on gasoline pumps or on spanners above gasoline pumps that do not exceed one quarter (1/4) square foot in area shall not be counted toward the maximum number of wall Signs allowed for each Use. One such Sign may be placed on each side of a gasoline pump or spanner. If such Signs exceed one quarter (1/4) square foot in area they shall be considered wall Signs and will be counted toward the maximum number of wall Signs allowed for each Use.

2. Special Purpose Signs

The following special purpose Signs shall be permitted:

1. Directional Signs. In any zone, one parking directional Sign not exceeding ten (10) square feet in area or six (6) feet in height at each Parking Area entrance or exit. Directional Signs painted on paved Parking Areas shall be permitted. No advertising message of any kind shall be displayed on a parking directional Sign.

2. Real Estate and Development Signs

   i. For sale or rental Signs. In any zone, one on-site unlighted Sign not exceeding six (6) square feet on each Street Frontage adjoining a Site. Freestanding Signs shall not exceed six (6) feet in height. Parcels of 40 acres or more shall be allowed one freestanding Sign not exceeding twenty (20) square feet in area and eight (8) feet in height. All sale and rental Signs shall be removed within thirty (30) days from the date of sale.

   ii. Open house Signs. Open house Signs shall be limited to four (4) square feet and shall not exceed three (3) feet in height. They shall be limited to no more than two days per week for any given property. One on-site and no more than three Off-Premise Signs are permitted. The Signs shall be placed no more than 30 minutes prior to the beginning of the open house and shall be removed within 30 minutes of the end of the open house. Off-Premise Signs placed in public Rights-of-Way or Easements shall be placed such that they do not obstruct traffic or visibility at the intersection. They shall not obstruct multi-purpose paths or sidewalks. When placed on private Easements, they shall be placed with the property owner's permission.

   iii. Construction Signs. On the Site of a property actively under construction, one unlighted Sign not exceeding twenty (20) square feet in area and six (6) feet in height in a residential zone or forty (40) square feet in area and eight (8) feet in height in a commercial or industrial zone to identify each contractor, architect or engineer engaged in the project. Said Signs shall be removed within five (5) days after the issuance of a certificate of occupancy by the Chief Building Inspector.

   iv. Directional Subdivision Signs. In any zone, unlighted Signs advertising Subdivisions containing only the name of the Subdivision, the name of the developer and/or agent, an identification emblem and directional message shall be permitted, provided:

      a. There shall be no more than three such Signs for each Subdivision;

      b. The total area of all Signs shall not exceed thirty (30) square feet;

      c. The total height of each Sign shall not exceed eight (8) feet;

      d. Directional subdivision Signs may be displayed during the two years following the date of recordation of the final plat for the Subdivision, or until one hundred percent (100%) of the Lots have been sold, whichever occurs first.

      e. Directional Subdivision Signs may be located outside the boundaries of the Subdivision, but no further than the closest intersection of a public Street.

v. Temporary on-site Subdivision Signs shall be permitted provided there shall be no more than one hundred (100) square feet of total Sign area for each Subdivision and a total of five (5) Signs. Freestanding Signs shall not exceed fifteen (15) feet in height in a commercial Subdivision and eight (8) feet in height in a residential Subdivision. Such on-site Signs shall be permitted to remain for two (2) years from the date the required Sign permit is issued. An extension beyond the two (2) year limitation may be granted for a one (1) year period subject to the approval of the Planning and Zoning Commission. However, if a conditional use permit is approved for a sales office, any temporary on-site Subdivision signs may remain for the term of the conditional use permit.

vi. Subdivision entrance Signs. At the major Street entrance(s) to a Subdivision or development, not more than two (2) signs, each not exceeding twenty (20) square feet in area per Sign, shall be permitted. Such Signs shall be attached to and shall not extend above a wall or fence, and shall indicate only the name and/or the address of the Subdivision or development. Design, color scheme and height of entrance Signs are subject to the approval of the Director of Community Development. Such Signs shall be constructed of materials and shall be affixed to the wall or fence in such a manner as to render them not readily susceptible to vandalism.

vii. Office Buildings and shopping centers and industrial Subdivisions may display leasing and rental Signs for a period of one year following final construction inspection. These Signs shall be limited to one freestanding Sign and two Building-mounted Signs not to exceed a total of one hundred fifty (150) square feet in area. Freestanding Signs shall not exceed eight (8) feet in height.

3. Special Sale Signs

For retail commercial Uses in any zone where such Uses are listed as permitted or conditional uses, special sale Signs may be permitted while a special sale of goods or services is being conducted. Signs attached to the Building or to an existing freestanding Sign shall be in rigid frames, and the display of the Signs shall be limited to fourteen (14) days per calendar quarter. The size of special sale Signs shall not exceed one hundred per cent (100%) of total square footage of any permanent on-premise Signs that advertise the commercial Use.

4. Other Special Signs

Flags, emblems, insignias and posters of any nation, state, international organization, political subdivision or other governmental agency; unlighted non-verbal religious symbols attached to a place of religious worship; and, temporary displays of a patriotic, religious, charitable, or civic character shall be exempt from the provisions of this section; however, if the height exceeds thirty (30) feet, such Signs shall be subject to the approval of the Director of Community Development. The preceding shall not be construed as to permit the use of such flags, insignias, etc. for the purpose

of advertising or identifying a product or business.

3. Signs in General, Agricultural Residential, and Rural Residential Zones

Except as prescribed in Section 26.4 (Special Purpose Signs), only the following signs shall be permitted in a General, Agricultural Residential, or Rural Residential Zone:

1. Residential Uses

   i. One nameplate not exceeding one square foot in area indicating the name of the occupant.

   ii. One Ranch Arch Sign meeting the following provisions.

      a. The Lot shall be a minimum of two (2) acres in area.

      b. Signs may only identify a property and its residential use. No Ranch Arch Sign shall be permitted in conjunction with other Uses the property.

      c. A minimum of fourteen (14') feet of clearance or alternative access for emergency vehicles shall be provided.

      d. The Ranch Arch Sign and associated supports may be a maximum of sixteen (16') feet tall.

      e. The maximum square footage of the Sign is capped at fifteen (15) square feet.

2. Agricultural Uses

   i. One unlighted Sign not exceeding six (6) square feet in area or six (6) feet in height pertaining to the sale of products raised on the premises.

   ii. One unlighted identification Sign not exceeding ten (10) square feet in area or six (6) feet in height identifying an Agricultural or related Use conducted on the premises.

   iii. Only one Sign pertaining to the Agricultural or related Use of the premises shall be permitted.

3. Public and Semi-Public Uses

   One Freestanding Sign not to exceed fifteen (15) square feet in area and six (6) feet in height, and one unlighted wall Sign not to exceed six (6) square feet in area.

4. Other Uses

   One Sign not to exceed fifteen (15) square feet in area. Freestanding Signs shall not exceed six (6) feet in height.

5. Special Uses

   Signs identifying special Uses shall be as authorized by the conditional use permit required for the establishment of special Uses within the G, AR, and RR Zones.

4. Signs in Residential Zones

Except as prescribed in Section 26.4 (Special Purpose Signs), only the following Signs shall be permitted in a Residential Zone:

1. Residential Uses

   i. Single-family Dwelling Units: one name plate not exceeding one square foot in area indicating the name of the occupant. On a site with more than one Dwelling Unit, name plates shall not be combined.

   ii. Multi-family Dwellings, Apartment developments, boarding or rooming houses, Dormitories: one unlighted identification Sign not exceeding fifteen (15) square feet in area. Freestanding Signs shall not exceed six (6) feet in height.

2. Agricultural Uses

   One unlighted Sign not exceeding six (6) square feet in area or six (6) feet in height pertaining to the sale of products raised on the premises.

3. Public and Semi-Public Uses

   One freestanding Sign not to exceed fifteen (15) square feet in area and six (6) feet in height, and one unlighted wall Sign not exceeding six (6) square feet in area. Lighting requirements for Signs shall be as specified in the required conditional use permit.

5. Signs in Commercial Zones

Except as prescribed in Section 26.4 (Special Purpose Signs), only the following Signs shall be permitted in a Commercial Zone:

1. Commercial Uses in the CN-2/A and CG-10,000 Zones

   i. One Freestanding identification Sign may be placed on each Lot or parcel of land. Freestanding Signs shall not exceed fifteen (15) feet in height. The maximum area of Freestanding Signs shall be as follows:

      a. In the CN-2/A Zone Freestanding Signs shall not exceed seventy-five (75) square feet in area.

      b. In the CG-10,000 Zone Freestanding Signs shall not exceed seventy-five (75) square feet in area; provided, however, that for each lineal foot of property frontage in excess of seventy-five (75) feet, an additional one square foot of Sign area shall be permitted to a maximum of one hundred (100) square feet. Where more than one business is being conducted on a single Lot or parcel of land, the permitted sign area for each business may be combined into one Freestanding Sign up to a maximum combined area of one hundred and twenty-five (125) square feet.

   ii. Wall Signs shall be allowed as follows:

      a. The total area of all wall Signs shall not exceed one square foot of area for each lineal foot of property frontage up to a maximum of one hundred fifty (150) square feet;

b. The maximum size of any one Sign shall be seventy-five (75) square feet;

c. A maximum of two (2) wall Signs may be placed on any side of a Building;

d. The total area of Signs displayed on any side of a Building shall not exceed seventy-five (75) square feet.

e. A maximum of six (6) wall Signs may be displayed for each Use;

f. Should a portion of a parcel be leased for development the dimensions and orientation of the leased portion shall be used to determine frontage and total Sign face square footage.

iii. Wall Signs on multiple tenant commercial Buildings shall be allowed as follows:

a. One tenant directory wall Sign may be displayed. The maximum size of the directory Sign shall be seventy-five (75) square feet. The directory Sign may be located on any wall of the Building.

b. One wall Sign may be displayed for each tenant. The maximum size of the wall Sign shall be forty (40) square feet. Each wall Sign shall be located on a wall of the space occupied by the tenant that is advertised.

c. One Projecting Sign may be displayed for each tenant. The maximum size of each Projecting Sign shall be as prescribed in Section 26.2.K. Each Projecting Sign shall be attached to a wall of the space occupied by the tenant that is advertised.

iv. Signs on canopies above gasoline pump islands shall be allowed as follows:

a. The total area of Signs placed on such canopies shall be deducted from the total area allowed by subsection 2.a above;

b. A maximum of two Signs may be placed on such canopies. The number of Signs placed on such canopies shall be deducted from the total number of Signs allowed by subsection 2.e above;

c. A maximum of two Signs that do not exceed six (6) square feet in area (i.e. franchise logos) may be placed on such a canopy. No more than one such Sign may be placed on any one side of a canopy. Such Signs shall not be counted toward the maximum total area allowed or the maximum number of Signs allowed.

2. Commercial Uses in the CH-10,000 Zone

Signs identifying commercial Uses in the CH-10,000 Zone shall be permitted to the same extent as in the CG-10,000 Zone; provided, however, additional signing may be approved under design review when applicable.

3. Public and Semi-Public Uses: Commercial Zones

One Sign not exceeding thirty (30) square feet in area. Freestanding Signs shall not exceed six (6) feet in height. Lighting requirements for Signs shall be as specified in the required conditional use permit.

6. Signs in Industrial Zones

   a. Except as prescribed in Section 26.4 (Special Purpose Signs), only the following Signs shall be permitted in an Industrial Zone:

      1. Industrial Uses in the MP-20,000 Zone

         i. One single-faced wall or canopy Sign per Use, not exceeding one square foot of area for each lineal foot of Building or portion thereof, may be placed on the side of the Building facing the major Street frontage up to a maximum of one hundred (100) square feet.

         ii. One monument-type Sign per Use may be permitted providing the maximum area shall not exceed twenty (20) square feet and the maximum height shall not exceed six (6) feet.

      2. Industrial Uses in the M-1-10,000 Zone

         i. One single-faced wall or canopy Sign per Use, not exceeding one (1) square foot of area for each lineal foot of Building or portion thereof, may be placed on the side of the Building facing the major Street frontage up to a maximum of one hundred (100) square feet.

         ii. One Freestanding Sign not exceeding one hundred (100) square feet in area provided, however, that there be no more than one (1) such Sign per lot or parcel of land. Where more than one (1) Use is being conducted on a single Lot or parcel of land, the permitted Sign area for each business may be combined into one (1) Freestanding Sign up to a maximum of one hundred twenty-five (125) square feet. Freestanding Signs shall not exceed fifteen (15) feet in height.

      3. Industrial Uses in the M-2-6,000 Zone

         Signs identifying industrial Uses in the M-2-6,000 Zone shall be permitted to the same extent as in the M-1-10,000 Zone.

      4. Public and Semi-Public Uses: Industrial Zones

         One Sign not exceeding thirty (30) square feet in area. Freestanding Signs shall not exceed six (6) feet in height.

      5. Should a portion of a parcel be leased for development the dimensions and orientation of the leased portion shall be used to determine frontage and total Sign face square footage.

7. Signs in Special Purpose Zones

   a. Except as prescribed in Section 26.4 (Special Purpose Signs), only the following Signs shall be permitted in the following Special Purpose Zones:

   b. Signs in the MHP Zone

      At the major Street entrance(s) to the Manufactured Home Park or Manufactured Home Subdivision, not more than two (2) lighted Signs, each not

exceeding twenty (20) square feet in area, attached to and not extending above a wall or fence, indicating only the name and/or the address of the Manufactured Home Park or Subdivision.

c. Signs in the PRD Zone

At the major Street entrance(s) to the planned residential development, not more than two Signs, each not exceeding twenty (20) square feet in area, attached to and not extending above a wall or fence, identifying only the name and/or the address of the planned residential development.

d. Signs in the PC Zone

Signs in the PC Zone shall be as specified in the text which constitutes the standards of development as approved by the Board of Supervisors.

e. Signs in the PS Zone

Except as prescribed in Section 26.4 (Special Purpose Signs), only the following Signs shall be permitted in the PS Zone:

i. Agricultural Uses. One unlighted Sign not exceeding six (6) square feet in area or six (6) feet in height pertaining to the products raised on the premises.

ii. All Other Uses. Signs shall be as specified in the conditional use permit required for all Uses except Agricultural Uses.

f. Signs in the OS Zone

1. Permitted Uses. One unlighted Sign not exceeding ten (10) square feet in area or six (6) feet in height.

2. Conditional Uses. Signs identifying Uses permitted subject to the granting of a conditional use permit shall be as specified in the approved use permit.

g. Signs in the FPM Zone

Signs in the FPM Zone shall be in accordance with the regulations applicable to the underlying zone in which the FPM Zone is combined or as authorized under a conditional use permit required for specified uses.

h. Signs in the RC Zone

Signs in the RC Zone shall be as specified on the development plan as approved by the Board of Supervisors.

i. Signs in the P Zone

Only those Signs as specified in Section 26.4.A (Directional Signs) shall be permitted in the P Zone except that additional signing may be permitted as authorized under a Conditional Use permit required for specified Uses.

j. Signs in the MR Zone

1. Permitted Uses. One unlighted Sign not exceeding ten (10) square feet in area or six (6) feet in height.

2. Conditional Uses. Signs identifying Uses permitted subject to the granting of a Conditional Use permit shall be as specified in the approved use permit.

Section 4.2.D: Permits and Administration

1. Cash Deposit on Certain Signs

   Directional Subdivision Signs. Applications for permits for directional Subdivision Signs shall be accompanied by a cash deposit of $250.00 for each Sign which shall be posted with the Finance Department. Such $250.00 cash deposit shall be used to defray the costs of Sign removal by the County in the event the permit holder defaults upon the agreement to remove same. Before any permit for any such Sign is issued, the applicant and the record owner(s) of the property shall furnish the Department of Community Development written authority granting the County permission to enter upon the premises to remove such Sign.

2. Elimination of Nonconforming Signs

   The elimination of nonconforming Signs shall be as prescribed in Section 29.5 (Nonconforming Signs).

3. Sign Permit Requirements

   a. The following Signs shall not require a Sign permit: Real Estate For Sale, Rental and Open House Signs (see Section 26.4.B.1), residential name plates (see Section 26.5.A or 26.6.A.1 as applicable) and residential construction Signs (see Section 26.4.B.2). A Sign permit shall be obtained for all other Signs including new construction, modifications, replacements and Sign face changes prior to their installation.

   b. The following information shall be submitted when applying for a Sign permit **in addition to the requirements of Section Administrative Permits.**

      1. Provide specific signage information (sketch or photographs) indicating color scheme, lettering or graphic style, lighting and material for each proposed or existing Sign.
      2. All open zoning Violations shall be addressed prior to the acceptance of a complete Sign permit application.
      3. All required Design Review Overlay, Conditional Use Permit, Variance, and other permits and licensing as necessary shall be obtained prior to the acceptance of a complete Sign permit application.

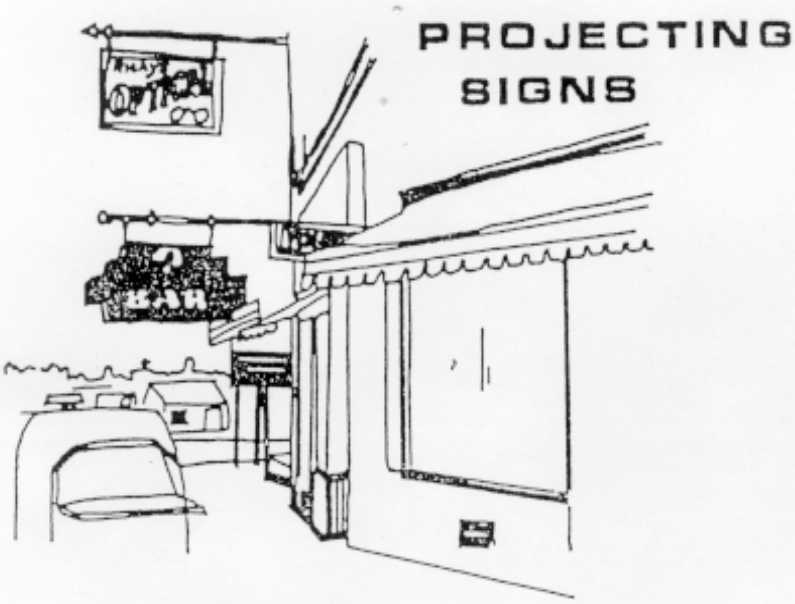

CANOPY SIGNS

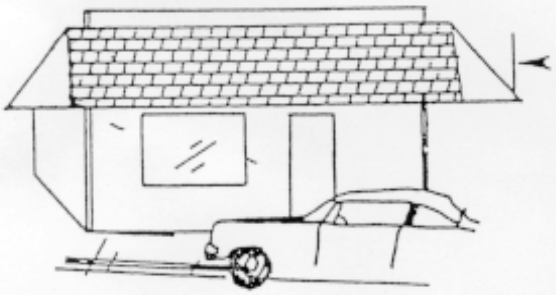

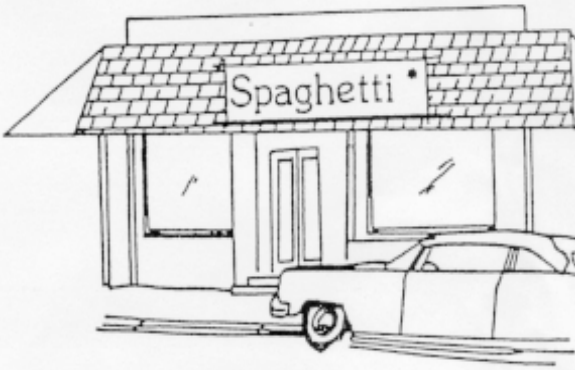

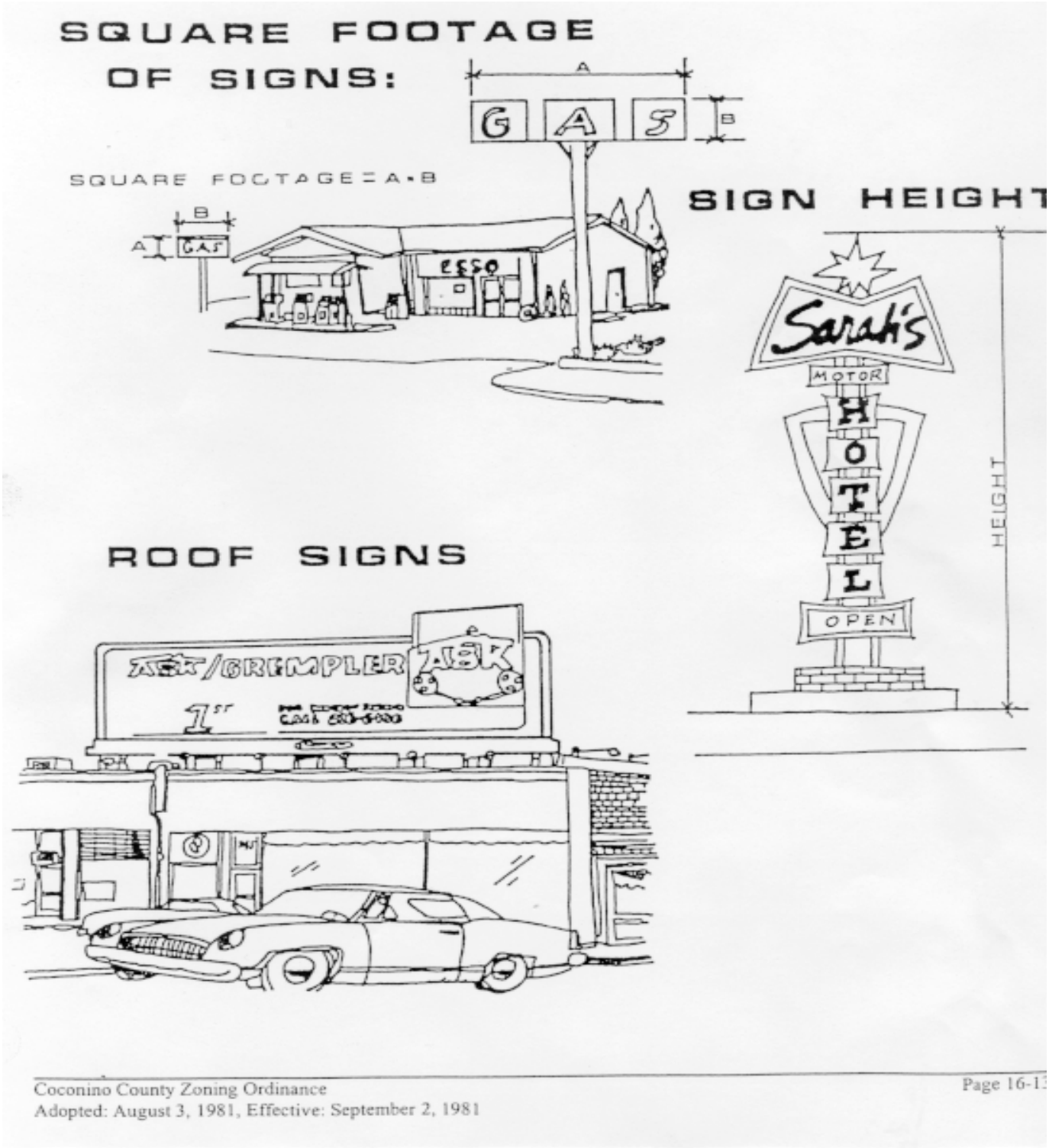
SQUARE FOOTAGE OF SIGNS:
A
B
G A S
SQUARE FOOTAGE = A • B
GAS
ESSO
SIGN HEIGHT
Sarah's
MOTOR
HOTEL
OPEN
HEIGHT
ROOF SIGNS
1st
Coconino County Zoning Ordinance
Adopted: August 3, 1981, Effective: September 2, 1981
Page 16-1

Section 4.3.A: Purposes

~~Legislative Intent~~

1. It is hereby found that the topography**,** ~~and~~ atmospheric conditions **and dark night skies** of Coconino County, Arizona, are uniquely suited for astronomical observation, that a substantial investment has been **and continues to be** made in observatories in the County, and that the use of certain types of outdoor lights and certain outdoor lighting practices have an adverse impact on astronomical observation.
2. It is further recognized that naturally dark landscapes and star-filled skies are valued by many.
3. **Futhermore**, ~~and that~~ poor lighting practices in outdoor lighting waste energy, hamper the reasonable use and enjoyment of property and can endanger the public welfare by producing unnecessary glare.
4. **Beyond impacts to humans, inappropriately designed outdoor lighting that disrupt nocturnal animal behavior, particularly migrating birds and other species.**
5. **It is further recognized that light sources emitting a wide range of wavelengths have greater impacts on natural biological systems including the human circadian rhythm, and that the use of yellow or amber colored lighting reduces such impacts.**
6. Accordingly, it is the intent of this Ordinance to encourage lighting practices and systems which will minimize light pollution, light trespass, and conserve energy while ~~maintaining~~ **allowing sensible use of lighting for** ~~night-time safety~~, utility, security and productivity. Since not all areas in the County ~~are near established observatories~~ **are equally sensitive to the deleterious effects of outdoor lighting**, ~~four~~ Lighting Zones are **hereby** established, allowing increased flexibility in the uses of outdoor lighting ~~further from the observatories~~ **in less sensitive areas**.
7. ~~There may be other areas that are worthy of designation where protection of the night sky is deemed to be highly important, and~~ **It is further recognized that there are other areas where protection of the dark night sky or natural nighttime landscape is deemed to be highly important** where the establishment of more restrictive Lighting Zones is desired.

Section 4.3.B: Applicability ~~Conflicting Regulations~~

1. In the event of conflict between the regulations set forth in this Ordinance and any other regulations applicable to the same area, the more stringent limitation and requirement shall govern.
2. Pre-existing Non-conforming Lighting: No Outdoor Lighting Fixture which was lawfully installed prior to the enactment of this Ordinance shall be required to be removed or modified except as expressly provided herein; however, no modification or replacement shall be made to a nonconforming fixture unless the fixture thereafter conforms to the provisions of this Ordinance.

3. Conformance after Abandonment/Damage: In the event that an Outdoor Lighting Fixture is abandoned or is damaged to the point of requiring repairs for safe operation, the repaired or replacement fixture shall comply with the provisions of this Ordinance.
4. Approved Materials and Methods of Construction or Installation/Operation
    a. The provisions of this Ordinance are not intended to prevent the use of any design, material or method of installation or operation not specifically prescribed by this code, provided any such alternate has been approved by the Community Development Director. The Community Development Director may approve any such proposed alternate provided he/she finds that it:
        1. Provides at least approximate equivalence to the applicable specific requirements of this Ordinance; and
        2. Is otherwise satisfactory and complies with the intent of this Ordinance.
5. Establishment of ~~Astronomical~~ Lighting Zones
    a. Lighting Zones: Different areas, with different developed and natural conditions, and different distances from astronomical observatories, ~~have differing levels of appropriate light usage, and~~ different sensitivities to the various obtrusive aspects of outdoor light usage. Because of this, three Lighting Zones are hereby defined and established. These Zones are shown on the Lighting Zone Maps that are attached hereto as Map 1a and Map 1b and by this reference made a part hereof. In general, these Zones are described as follows:
        1. Zone I: all area within Coconino County **at the** ~~located within two-point-five (2.5) miles of the~~ following locations:
            i. Within seven (7) miles of the ~~The~~ Hall telescope at Lowell Observatory on Anderson Mesa
            ii. Within seven (7) miles of the ~~The~~ Kaj Strand telescope at the U.S. Naval Observatory
            iii. Within fifteen (15) miles of Roden Crater
            iv. Within fifteen (15) miles of the The Discovery Channel Telescope **near Happy Jack**
            v. Within seven (7) miles of the boundary of Rogers Lake Natural Area
        2. Zone II: all areas within Coconino County **outside of** ~~more than two-point-five miles yet less than seven (7) miles from~~ the locations listed in part 27.4.A.1 above **yet within the following locations:**
            i. Within fifteen (15) miles of the Hall telescope at Lowell Observatory on Anderson Mesa
            ii. Within fifteen (15) miles of the Kaj Strand telescope at the U.S. Naval Observatory
            iii. Within twenty-five (25) miles of the Discovery Channel Telescope near Happy Jack
            iv. Within five (5) miles of the boundary of Walnut Canyon

National Monument, Sunset Crater National Monument, Wupatki National Monument, and Grand Canyon National Park

v. Within fifteen (15) miles of the boundary of Rogers Lake Natural Area

3. Zone III: all ~~other~~ areas within Coconino County **outside of the locations listed in parts 27.4.A.1 and 27.4.A.2 above.**

b. Split Parcels: A parcel located in more than one of the described Lighting Zones shall be considered to be only in the more restrictive Lighting Zone.

6. **Exemptions**

a. Airports:

Airport navigation lighting systems are exempt from the provisions of this Ordinance. All other lighting at airports, including that used for loading areas, hangars, terminal aprons, parking areas, etc., shall conform to all applicable standards of this Ordinance.

b. Holiday Decorations:

Low-wattage holiday decorations are exempt from the provisions of this Ordinance from 15 November through 15 January. Such lighting and all associated wiring used outdoors must be certified for outdoor use by Underwriters Laboratories.

Section 4.3.C: Performance Standards

1. General Requirements, all Zones

a. Preferred Source and Zone I Use Preference

1. Preferred Sources: Low-Pressure Sodium (LPS) ~~lamps~~ and **narrow-spectrum amber LED (aLED)** are the preferred illumination sources throughout the County; their use is to be encouraged, when not required, for outdoor illumination whenever ~~its~~ **their** use would not be detrimental to the use of the property.

2. Day/Night Uses: Uses which can turn off their outdoor lighting during night hours are to be encouraged in Lighting Zone I; those which require all night illumination are to be discouraged.

b. Prohibited Lighting

1. Upward-directed Floodlighting: Outdoor floodlighting by flood light projection above the horizontal plane is prohibited.

2. High-Intensity Lights: Search lights, laser source lights, or any similar high-intensity light shall not be permitted, except in emergencies by police and fire personnel or at their direction.

3. Mercury Vapor Sales: The installation, sale, offering for sale, lease or purchase of any mercury vapor light fixture or lamp for use as outdoor

lighting is prohibited, except that until 1 January 2006, the provisions of this subsection shall not apply to any replacement lamp.

4. Mercury Vapor: Mercury vapor lamps in use for outdoor lighting on the effective date of this Ordinance shall not be so used after 1 May 2006.

5. Bottom-mounted Sign Lighting: Bottom-mounted outdoor advertising Sign lighting shall not be used in Zones I, II and III after 1 May 1996.

c. Shielding

1. The requirements for lamp source and shielding of light emissions for Outdoor Light Fixtures are as follows:

Use Code:

i. *~~PA = allowed~~,* **partially** *shielded fixture permitted subject to the amounts listed in Table 27.6.C*

ii. *but fully shielded fixtures preferred.*

iii. *F = fully shielded, allowed*

iv. *X = prohibited*

Table Lamp Type and Shielding Standards

LAMP TYPE	ZONE I	ZONE II	ZONE III
Class 1 Lighting:			
Low-Pressure Sodium	F	F	F
Others above 2500 Lumens (1)	X	F	F
Others below 2500 Lumens (1)	F	F	A(2,3)
Class 2 Lighting:			
Low-Pressure Sodium	F	F	F
Others above 2500 Lumens (1)	X	X	X
Others below 2500 Lumens (1)	F	F	A(2,3)
Class 3 Lighting:			
Low-Pressure Sodium	F	F	F
Others above 2500 Lumens (1)	X	X	F
Others below 2500 Lumens (1)	F	A(2,3)	A(2,3)
Residential Lighting (all classes):			
All types over 1000 Lumens (1)	F	F	F
All types below 1000 Lumens (1)	F	A(2,4)	A(2,4)

~~Note 1. Examples of lamp types of 2000 (1000) Lumens and below (The acceptability of a particular light is decided by its Lumen output, not wattage; values listed are approximate; check manufacturer's specifications):~~

1. ~~100 (60) Watt Standard incandescent and less~~
2. ~~(b) 100 (60) Watt Tungsten-Halogen (quartz) and less~~
3. ~~(c)No available High-Pressure Sodium of Metal Halide~~
4. ~~(d) 25 (15) Watt Fluorescent and less~~
5. ~~(e) 26 (13) Watt Compact Fluorescent and less~~

~~Note 2. Lights shall be shielded whenever feasible to minimize light spilled into the night sky or adjacent properties.~~

Note 3. Unshielded lighting is limited to a total of 3000 Lumens per Acre on non-residential and multi-family residential land Uses; 2000 Lumens per residence on single-family residential properties.

~~Note 4. For single-family residential Uses, unshielded fixtures up to 2000 Lumens output per lamp and a total of 8000 Lumens per residence are permitted if used in functioning motion-sensing fixtures that remain on for short periods only.~~

2. Effective Shielding:

All light fixtures ~~which are required to be shielded~~ shall be installed in such a manner that the shielding is effective as defined in Section 27.3 under Fully Shielded Fixture and Partially Shielded Fixture.

3. Direct Lighting on Site:

~~All light fixtures, except streetlamps, shall be aimed or shielded so that the direct illumination shall be confined to the property boundaries of the source as much as is feasible.~~

4. Direct Lighting off Roadways:

~~All light fixtures, except streetlamps, shall be installed in such a manner that the direct illumination does not fall onto any public or private Street or Road as much as is feasible.~~

d. Lumen Output

1. For purposes of determining total light output from a light fixture, lighting assemblies which include multiple unshielded or partially shielded fixtures or lamps on a single pole shall be considered as a single fixture (see below). Partially shielded lighting is limited to the amounts listed in section 27.6.C.

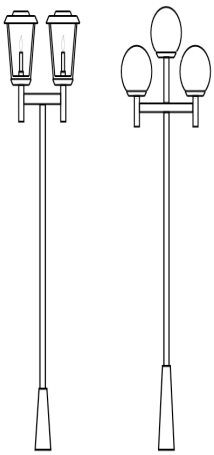

e. ~~Total Outdoor Light Output:~~

f. Total Outdoor Light Output, excluding streetlights used to illuminate public Rights-of-Way, shall not exceed the following limits averaged over the entire project (values listed are total initial lamp Lumens per Acre and per residence):

Table Maximum Total Outdoor Light Output Standards (values listed are Lumens per Acre and Lumens per residence)

Land Use	Lighting Zone		
	I	II	III
Commercial, Industrial, and Multifamily (Lumens per Acre)			
total (shielded + unshielded)	25,000	50,000	100,000
unshielded only	0	3,000	3,000
Non-LPS	2,500	50,000	100,000
Single-family Residential (Lumens per residence)			
total (shielded + unshielded)	10,000	30,000	30,000
unshielded only	0	30,000	30,000

g. Inclusion Toward Total Outdoor Light Output:

1. Fully shielded fixtures installed under **building overhangs, canopies, roof eaves or balconies** ~~such that all parts of the fixture are located underneath and at least five~~ feet ~~from the nearest edge of a Building overhang, roof eave, or balcony are to be included in the Total Outdoor Light Output as though they produced only one-quarter of the lamp's rated lumen output.~~ .

~~The Lumen output of lamps mounted on or within the lower surface of a canopy is~~

also included toward the Lumen caps in Section 27.6.C as follows:

i. Fixtures installed such that any part of the fixture is five feet or less from the nearest edge of the canopy are to be included in the Total Outdoor Light Output by simply adding the Lumen outputs of the lamps used;

ii. Fixtures installed such that all parts of the fixture are located at least five feet but less than 10 feet from the nearest edge of the canopy are to be included in the total outdoor light output as though they produced only one-quarter of the lamp's rated lumen output;

iii. Fixtures installed such that all parts of the fixture are located ten or more feet from the nearest edge of a canopy are to be included in the Total Outdoor Light Output as though they produced only one-tenth of the lamp's rated Lumen output.

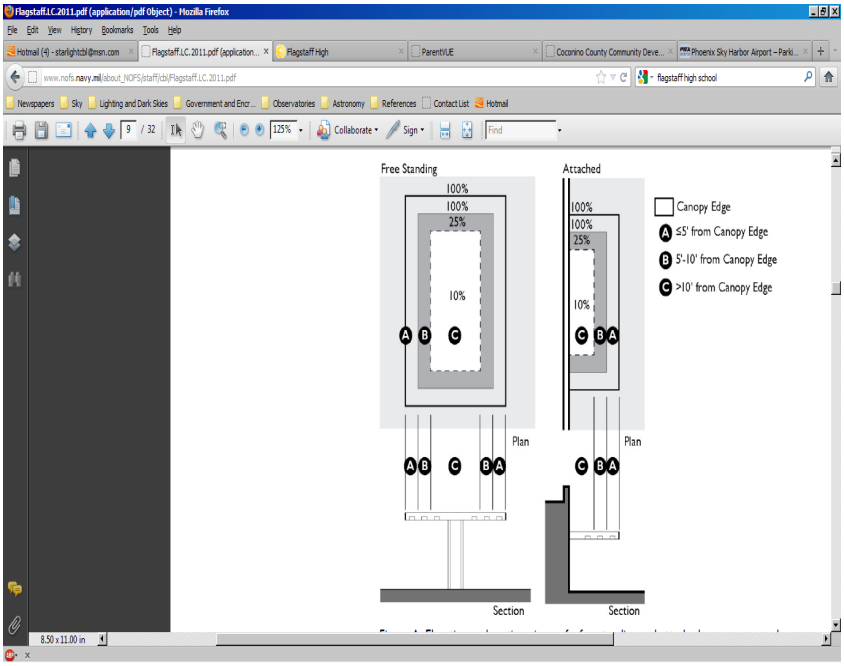

Elevation and section views of a freestanding and attached canopy or overhang, showing fixture location and initial lamp output percentage counted toward total outdoor light output.

h. Time Management

1. Curfews: Class 1 and Class 3 lighting must be extinguished at the curfew times listed **below**~~in Table 27.6.~~G, or no later than 30 minutes after the business closes, whichever is later ~~(for holiday decoration exemption see 27.9.B)~~:

Lighting Curfews
(Sports, Class 1, Class 3, Signs)

Lighting Zone		
I	II	III
9:00pm	10:00pm	11:00pm

2. Special ~~Requirements~~ **Uses**

   a. Outdoor Advertising Signs

      1. Externally Illuminated Sign Standards:

      External illumination for Signs shall conform to all provisions of this Code. In particular, such lighting shall be treated as Class 1 lighting and shall conform to the lamp source, shielding restrictions and Lumen caps of Section 27.6. All upward-directed Sign lighting is prohibited.

      2. Internally Illuminated Sign and Neon Sign Standards:

      Illumination of Copy and Background; Colors: Outdoor internally-illuminated advertising Signs must be constructed as follows:

         i. In Lighting Zone I: the Sign face(s) must be composed of illuminated text and symbols against an opaque (unilluminated) background. The colors of these elements are not restricted.

         ii. In Lighting Zones II and III: the Sign face(s) must be either composed of illuminated text and symbols against an opaque background or with generally LIGHTER text and symbols against a colored (not white, off-white, light gray, cream or yellow) background.

      3. Exclusion of Lamp Outputs:

      Lamps used for internal illumination of Signs shall not be counted toward the Lumen caps in Section 27.6.C.

      4. Neon Signs:

      Neon Signs shall be treated as internally illuminated Signs for the purposes of this Code, and shall not have their luminous outputs counted toward the Lumen caps in Section 27.6.C. Neon lighting extending beyond the area considered to be the Sign area (as defined in the Sign Code of this jurisdiction) shall conform to all provisions of this Code. In particular, such lighting shall be treated as Class 3 (decorative) lighting and shall conform to the Lumen caps and shielding standards of Section 27.6.

      5. Non-Sign Lighting:

      Other internally-illuminated panels or decorations not considered to be signage according to the Sign code of this jurisdiction (such as illuminated canopy margins or Building faces), shall be considered decorative (Class 3) lighting, and shall be subject to the standards applicable for such lighting, including but not limited to the lamp source, shielding standards and Lumens per Acre caps of Section 27.6.

      6. Curfews:

Illumination for all advertising Signs, both externally and internally illuminated, shall be turned off no later than the curfew times listed in Table 27.6.G or when the business closes, whichever is later. Signs subject to curfews are required to have functioning and properly adjusted automatic shut-off timers.

7. Curfews for Pre-Existing Signs:

   Light background (white, off-white, light gray, cream or yellow) internally illuminated Signs, installed legally before enactment of this code [December 18, 2001], may continue to be used and illuminated but must conform to the curfews of Section 27.6.G.

b. Service Station Canopies:

   1. Lighting Class:

      Lighting for service station canopies shall be considered Class 1 lighting.

   2. Shielding:

      All Luminaires mounted on or recessed into the lower surface of service station canopies shall be fully shielded and utilize flat lenses.

   3. Total Under-Canopy Output:

      The total light output used for illuminating service station canopies, defined as the sum of all under-canopy initial bare-lamp outputs in Lumens, shall not exceed sixty (60) Lumens per square foot of canopy in Lighting Zone II and III, and shall not exceed twenty (20) Lumens per square foot in Lighting Zone I (note: these values are not footcandle illuminances). All lighting mounted under the canopy, including but not limited to Luminaires mounted on the lower surface or recessed into the lower surface of the canopy and any lighting within signage or illuminated panels over the pumps, is to be included toward the total at full initial Lumen output.

c. Outdoor Recreational Facilities:

   1. Lighting Class: Lighting for **Outdoor Recreational Facilities** ~~field/track/arena areas only~~ shall be considered Class 1.

   2. Lumen Cap Exemption: Lighting for **Outdoor Recreational Facilities** ~~field/track/arena~~ areas only is not subject to the Lumens per Acre limit set in subsection 27.6.C.

   3. Shielding: Fixtures used for **Outdoor Recreational Facilities** ~~field/track/arena~~ areas must be fully shielded.

   4. Curfew: No such facility shall be illuminated after the curfew times listed here except to conclude a scheduled recreational or sporting event in progress prior to the curfew, and prevented from concluding before the curfew by unforeseeable circumstances.

Section 4.3.D: <u>Permits and Administration</u>

1. Temporary Lighting Permits

a. Findings: The Community Development Director may grant a permit for temporary lighting if he/she finds the following:

1. The purpose for which the lighting is proposed is not intended to extend beyond thirty (30) days; and
2. The proposed lighting is designed in such a manner as to minimize light pollution as much as is feasible; and
3. The proposed lighting will comply with the general intent of this Ordinance; and
4. The permit will be in the public interest.

b. Application Contents: The application for the Temporary Lighting Permit shall include the following information:

1. Name and address of applicant and property owner;
2. Location of proposed fixtures;
3. Type, wattage and lumen output of lamp(s);
4. Type, shielding and use of proposed fixtures;
5. Intended use of the lighting;
6. Duration of time for requested exemption;
7. The nature of the exemption;
8. Such other information as the Community Development Director may request.

c. The Community Development Director shall endeavor to rule on the application within five (5) business days from the date of submission of the request and notify the applicant in writing of his/her decision. The Community Development Director may grant one (1) renewal of the permit for an additional thirty (30) days if he/she finds that, because of an unanticipated change in circumstances, a renewal would be in the public interest. The Community Development Director is not authorized to grant more than one temporary permit and one renewal for the same property within one calendar year. A denial by the Director may be appealed to the Planning and Zoning Commission within 30 days.

2. ~~Nonconforming Uses~~
3. Variances

Any person desiring to install an Outdoor Lighting Fixture in Violation of this Ordinance may apply to the Board of Adjustment for a Variance from the regulation in question per Section 30.8. Such Variances shall be allowed where a literal application or enforcement of the regulations would result in practical difficulty or unnecessary hardship and the relief granted would not be contrary to the public interest but do substantial justice and be in accordance with the spirit of the regulations and this Ordinance. Provided, that any Variance may be allowed subject to any reasonable conditions that the Board may deem necessary to effectuate the purpose of this chapter.

4. Lighting Permit Requirements

   a. Non-Single Family Residential Lighting:

      1. Whenever a person plans to install outdoor lighting, Lighting Permit must be applied for and granted. The applicant shall, as a part of said application, submit sufficient information to enable the Community Development Director to determine whether the proposed lighting will comply with this Ordinance.

      2. The following information shall be submitted when applying for a Lighting Permit **in addition to the requirements of Section Administrative Permits.**

         i. A description of each illuminating device, fixture, lamp, support and shield. This description may include, but is not limited to, manufacturer's catalog cuts and drawings (including sections where required), lamp types and lumen outputs. For existing lighting, photographs of the fixtures will be accepted if original manufacturer's information is not available.

         ii. A separate Building Permit application shall be submitted for new lighting construction and electrical installation. Required Building Permits shall be obtained prior to the installation of lighting.

   b. Single Family Residential Lighting:

   When lighting on single family residential sites is a condition of approval the above permit process is to be applied and compliance with the Zoning Ordinance verified before issuance of the Certificate of Occupancy.

Section 4.4.A: Purposes

The purpose of this Section is to establish Landscaping standards and guidelines in order to maintain and enhance the environmental qualities of the County; to mitigate the impacts of adjacent Uses; and to enhance the quality and appearance of new or existing development in the County. By requiring adequate and environmentally compatible Landscaping, the visual quality of the environment will be enhanced, and other environmental qualities will be improved by promoting conservation of water used for Landscaping, addressing wildfire safety concerns, providing erosion and storm water runoff control, providing control of Noxious Weeds and invasive plants, requiring native and/or drought tolerant plants, and encouraging the preservation of existing trees and vegetation.

Section 4.4.B: **Applicability**

Conflicting Regulations

In the event of conflict between the regulations set forth in this Section and any other regulations applicable to the same area, the more stringent requirement shall govern.

Section 4.4.C: **Performance Standards** ~~General Provisions~~

1. All Landscaped Areas shall be permanently maintained in a neat and orderly manner and all plants shall be maintained in a healthy, living condition. Dead plants, weeds, and non-plant materials must be removed and replaced as necessary.
2. All Landscaped Areas shall be provided with a permanent means of irrigation pursuant to Section 28.5.A.5.
3. In all areas of the County the preferred Landscaping materials are Native Plants as defined by the Native Plants for Northern Arizona Landscapes compiled by The Arboretum at Flagstaff. The use of specifically identified Invasive Species and Noxious Weeds is prohibited. Some non-native species, which meet the definition of Drought Tolerant, may be used.
4. All portions of a Site where existing vegetative cover is damaged or removed, or consists primarily of weeds, and are not otherwise covered with new improvements, must be successfully revegetated with a substantial mix of native and/or drought tolerant grasses and ground covers. The density of the re-established vegetation must be adequate to prevent soil erosion and invasion of weeds after one growing season.
5. All required Landscaping must be located on the property it serves. Elements such as plants, walls, fences, buffering and screening located on adjacent properties or public Rights-Of-Way shall not count toward the Landscaping requirements.
6. Additional Landscaping may be established in public Rights-Of-Way with the approval of the appropriate jurisdiction (i.e. ADOT or County Public Works).
7. Retention of existing native vegetation and natural features is encouraged. Special consideration may be given to developments which retain existing trees, vegetation, and

natural features of the Site where possible and which are replaced and enhanced when necessary.

8. All landscape design shall take into consideration the need for Defensible Space.
9. Lighting used in the landscape plan must comply with the provisions of Section 27 of this Ordinance.
10. Preferred Materials
    a. All landscape plans must use native and/or Drought Tolerant plant materials appropriate for their location. Invasive Plants and Noxious Weeds are prohibited. Preferred Landscaping materials are native plants as defined by the Native Plants for Northern Arizona Landscapes compiled by The Arboretum at Flagstaff. A detailed plant list shall be included with all plans. The list shall include both the botanical and common names.
    b. If turf areas are included, they must use a sod or seed mix specifically cultivated to thrive in the conditions present at the particular Site. The use of non-native and/or high water consumptive turf such as Kentucky Blue Grass is discouraged. The applicant must provide information regarding the composition of a sod or seed mix as part of the detailed plant list as required.
    c. Rock material used in Landscaping shall be subordinate to and not a substitute for plant material. When used, rock material must be compatible and appropriate.
    d. The use of artificial trees, shrubs, turf, or plants shall not be permitted as Landscaping.
11. Design
    a. Plants should be grouped in strategic areas and not spread thinly around the site.
    b. Trees must be planted to allow for maximum growth in height and shape without the need for pruning in excess of that required to maintain the health of the plant.
    c. New vegetation shall be selected, planted, and maintained so that at maturity it will not interfere with utility lines, snow storage areas, vehicular parking, pedestrian circulation, traffic sight visibility at driveways and Street intersections, and will not cause damage and upheaval of sidewalks and pavement.
    d. All landscape designs shall take into consideration the need for Defensible Space.
    e. All Landscaped Areas shall incorporate a ground cover to tie the Landscaping together and to discourage weed growth.
    f. A mix of deciduous and evergreen plant materials shall be used to provide a year-round effect.

g. A clear sight triangle shall be maintained at all Street intersections and driveway entrances. Such clear sight triangle shall be determined by measuring 25' along each property line at Street intersections, and along the property line and the driveway for driveway entrances. Landscape materials in this area shall have a clear trunk height of six (6) feet from grade level; mature shrubs, groundcover, or other materials shall not exceed three (3) feet in height from grade level.

12. Preservation of Existing Vegetation

a. The preservation of healthy existing trees and shrubs shall be provided wherever possible. These trees and shrubs must be shown on the landscape plan and labeled as "existing." They must also be listed on the plant list with their current size shown.

b. All landscape plans must identify methods for protecting existing vegetation that will remain. Construction materials and debris may not be stockpiled within 1 ½ times the drip line perimeter outside the drip line of all trees and shrubs being retained. This protection area must be clearly marked with temporary fencing or similar material.

13. Standard Plant Units

a. All Landscaping requirements are stated in terms of the number of standard Plant Units required. This Section defines 3 alternative Plant Units. All Landscaping shall conform to one or more of the Plant Unit alternatives of this Section.

b. The following table specifies Plant Unit alternatives. In general, the three alternative plant mixes are interchangeable. In some instances, the Director of Community Development may require the use of a specific Plant Unit to achieve a particular result.

Plant Unit Alternative	Quantity Required	Type and Size at Time of Installation
Alternative A	3	8' high evergreen trees
	10	2' high shrubs (or 5 gal min.)
Alternative B	2	6' high evergreen trees
	1	3"caliper deciduous tree (min 10-12' height)*
	4	2' high shrubs (or 5 gal min.)
Alternative C	1	3" caliper deciduous tree (min 8-10' height)
	2	1 ½" caliper deciduous trees (min 6'-8' height)
	14	2' high shrubs (or 5 gallon minimum)

Table Notes:

c. Clump or cluster planting which will achieve a total diameter of 4” may be considered in lieu of a 3” caliper tree.

d. When applied through the Ordinance, and where the resulting number of required Plant Units is expressed in a fraction, the required number of Plant Units shall be rounded off to the nearest whole number (rounding is done at the end of calculations).

14. Parking Lot Landscaping

a. Landscaping shall be proportionally distributed throughout parking and driveway areas, including the perimeter and interior of the parking area. Where islands are required or provided, they shall be landscaped.

b. Parking lot Landscaping shall be provided according to the following table.

Plant Units	Minimum Landscaped Area Required	Minimum Plant Units
0-5	none	none
6-20	324 sq. ft.	1 unit
21-32	27 sq. ft./space	2 units
33-44	27 sq. ft./space	3 units
45+	40 sq. ft./space	3+units[1]

Table Note 1: The number of Plant Units required shall be pro-rated for parking lots over 44 spaces at the rate of one plant unit per 324 square feet of landscaped area.

c. Where parking lots are adjacent to side or rear property lines, a minimum 5’ wide perimeter strip of Landscaping shall be provided.

d. All Landscaped Areas adjacent to vehicular parking and access shall be protected by 6” vertical concrete curbing, 6” bumper stops, or similar materials in order to control storm water flows and minimize damage by vehicular traffic.

e. The curb or barrier around Landscaped Areas may be utilized as a wheel stop provided the area of vehicle overhang does not exceed 2 ½ feet and does not damage or interfere with the Landscaping. A minimum five (5) foot wide planter is required for a single vehicle overhang and an 8 foot wide planter for a double vehicle overhang.

f. Parking, Buildings, and display or storage of equipment of vehicles is not permitted in required Landscaped Areas.

g. To ensure that landscape materials do not constitute a driving hazard, trees used to landscape parking islands shall have a clear trunk height of six (6) feet from grade level; mature shrubs, groundcover, or other Landscaping material shall not exceed three (3) feet in height from grade level.

15. Buffer and Screen Landscaping

    a. All required front and street side Landscape Areas shall be fully landscaped in accordance with a minimum of 1 Plant Unit for every 100 lineal feet of frontage. In areas where greater buffer or screening is desirable additional Plant Units may be required by the Planning and Zoning Commission.

    b. Where detention basins and/or drainageways are constructed partially or entirely within Setback areas or other high-visibility areas on Sites, they must be adequately landscaped. A minimum of two (2) Plant Units shall be required for every 100 feet of the perimeter of the basin, measured at the top of the basin. All detention basin surfaces shall be treated with a native groundcover seed mix or lawn mix as required, river rock or similar non-plant alternative may be allowed subject to the approval of the Director of Community Development.

16. Screening

    a. Where landscape screening is required by the Ordinance or through Commission or Board action, such Landscaping shall be in addition to the general Landscaping requirements.

    b. Required fences and walls adjacent to County roads or State Highways shall have a unifying theme and provide variation by using changes in height, different material combinations, offset angles, articulation, and/or plant materials.

17. Site Landscaping

    In addition to the required buffer and screen Landscaping, and parking lot Landscaping, the Building site shall include Landscaping designed to visually integrate the Structure(s) with the Site.

    1. The Site Landscaping shall include one Plant Unit for every 100 lineal feet of perimeter of the Building foot print, and located within 50 feet of, and adjacent to, the perimeter of the Building. In situations where the Use or Building design makes planting within 50 feet impractical, such as mini storage warehousing, it may be permitted to place some or all of their on-site Building Landscaping beyond the 50 foot limit, subject to the approval of the Director of Community Development.

    2. If phasing is proposed, or if only a portion of the parcel is being developed, the undeveloped area shall be maintained in existing Native Plants. If the area has been disturbed or the existing vegetation consists primarily of weeds, the area must be successfully revegetated with a substantial mix of native and/or Drought Tolerant grasses and ground covers. The density of the re-established vegetation must be adequate to prevent soil erosion and invasion of weeds after one growing season.

    3. For Manufactured Home Parks or Multi Family Developments, one Plant unit per single residential unit or Lot is required.

18. Installation and Maintenance

    a. Landscaping and irrigation devices shall be installed in accordance with the approved landscape plan prior to issuance of a Certificate of Occupancy or

commencement of the use. If approved Landscaping and irrigation cannot be installed prior to occupancy or commencement of the Use, a temporary Certificate of Occupancy may be issued upon posting of an approved financial assurance based on a contractor's estimate for completing the work, plus 10% contingency. The work shall be completed prior to the end of the next planting season.

b. It is the responsibility of the property and/or business owner to maintain the Site as approved and provide for replacement of plant materials that have died or otherwise been damaged or removed, and maintenance of all landscape materials including, but not limited to fencing, paving, rocks, and retaining walls.

19. Modification to Landscaping Standards

The Director of Community Development may grant minor modifications to the standards set forth in this Section if it is determined that:

1. The strict application of these standards is not possible due to existing physical conditions; and
2. The modification is consistent with the purpose of this Section; and
3. The modification is the minimum modification that would afford relief and would be the least modification of the applicable provisions of this Section.

Section 4.4.D: Permits **and Administration**

Landscape Plan Requirements

a. Landscape Plan required: An approved landscape plan is required prior to any Site clearing for any Use other than single family residential. A landscape plan designed in accordance with this Section shall be provided for all new development and redevelopment, except for single family residential. The landscape plan shall be prepared by a landscape architect, a professional landscape designer, or a plant nursery, unless a waiver is approved by the Director of Community Development. Additions to an existing Building, or substantial improvements comprising 25% of the value of the Building prior to the improvements, as determined by the Chief Building Official, shall prompt compliance with these requirements for that portion of the Site affected by the improvements. Additions to an existing Building, or substantial improvements comprising over 50% of the value of the Building prior to the improvements, as determined by the Chief Building Official, shall prompt compliance with these requirements for the entire Site.

b. The plan shall include the following:

1. A site plan drawn to scale providing sufficient detail to evaluate the features of Landscaping and irrigation required by this Section. The site plan shall show the location of property lines, proposed contours, drainage Structures, existing and proposed development including all Buildings, parking, pedestrian, and circulation areas. If phased development is

proposed, the phasing plan shall be identified. The plan shall show the location of all proposed Landscaped Areas, and the dimensions and total area (in square feet) for each interior parking lot Landscaped Area.

2. The location, design and materials of all Landscape Areas including planting strips along all Streets, earth berms, retaining walls, fences, water features, retention areas, trash enclosures, lighting, and paved areas. Where fencing is used for required screening, a scaled elevation drawing of the fence must be included.

3. The location, size, and type of all proposed plant and non-plant materials, including any existing vegetation to be retained and existing trees over 6" caliper proposed to be removed.

4. A chart comparing the Landscaping requirements to the proposed materials and area covered, including, but not limited to, the following information:

   i. Total parking lot and circulation areas, including interior drives and driveways (in square feet);

   ii. Total number of parking stalls required and total provided;

   iii. Total parking lot Landscaped Area required and total provided (in square feet);

   iv. Total buffer and screen Landscaped Area required and total provided (in square feet);

   v. Total site Landscaped Area required and total provided (in square feet);

   vi. Total quantity and size of plant material required and the total provided;

   vii. Size, type, and quantity of non-plant material to be provided;

   viii. Any other information as the Community Development Director may determine is necessary to ensure compliance with this Ordinance.

5. All landscape plans must provide an irrigation plan. Irrigation systems shall be designed to maximize efficient water use and minimize the waste of water. An automatic irrigation system designed to provide efficient irrigation coverage is required.

   i. The irrigation system should be designed to correlate to the organization of plants into zones with similar watering requirements.

   ii. The use of treated effluent, a collection system to capture runoff, and other alternatives for irrigation purposes are encouraged.

   iii. A waiver from the automatic irrigation system requirement may be approved by the Director of Community Development. If an alternative means of watering is proposed a specific plan must be provided.

c. If the Community Development Director determines that the proposed Landscaping does not comply with this Ordinance, the plan will not be

approved.

SECTION 4.5: PROJECTIONS INTO REQUIRED YARDS

Section 4.5.A: Purpose

1. **Yards are required to ensure that the use of a property does not infringe on the rights of neighbors, to allow room for light and sunshine in the home, to reduce the spread of fire from Structure to Structure, for space for recreation outside the home, and to serve as filtration areas for storm water run-off**
2. **Allowed projections are permitted in order to provide reasonable levels of flexibility for encroachment into required Yards while protecting the purpose of the yard.**

Section 4.5.B: Applicability and Exemptions

The following performance standards apply in all zones unless otherwise specified. *(new to RC and all Special Purpose zones)*

Section 4.5.C: Performance Standards

1. **Required separations distances between Structures on the same property may be reduced to five (5') feet if:**
   a. **Structures which encroach into separations have a one (1) hour fire rating on wall(s) which encroach into required separations.**
   b. **they have a Class A roof**

   per the International Residential Code or stricter requirement of adopted Building Codes.
2. ~~Steps, air conditioning units, architectural features, such as eaves, awnings, chimneys, stairways, wing walls or bay windows,~~ **Portions of a Structure which are less than fifteen (15') feet in height and less than twenty (20%) percent of the length of the side of the Structure closest to said setback shall be permitted the following projections:**
   a. **In any Residential Zones** may project not more than six **(6')** feet into any required Front, Street Side or Rear Setback, nor into any required Side Setback more than one half (1/2) of said required Side Setback.
   b. ~~In any Commercial Zone, Accessory Structures shall meet all of the Setback requirements for main Buildings.~~
   c. In any Commercial Zone **(RC)**~~, porches, steps, architectural features such as attached canopies or eaves, chimneys, balconies or stairways~~ may not project more than four (4) feet into any required Setback. Greater projections may be permitted when it is demonstrated that such additional projections are needed for solar or alternate energy purposes, subject to the approval of the Director of Community Development.

d. In any Industrial Zone, ~~architectural features, canopies, eaves, or stairways~~ may project not more than one-half **(1/2)** the width of the required Setback. Greater projections may be permitted when it is demonstrated that such additional projections are needed for solar or alternate energy purposes, subject to the approval of the Director of Community Development.

3. Uncovered paver/stone patios or slabs on grade may encroach into any Setback. Balconies, porches or decks shall not encroach or project into any required Setback.
4. Swimming pools, including all Accessory or appurtenant Structures and equipment, shall **be allowed to encroach so long as they** maintain a minimum Setback of five (5') feet from all property lines and Buildings.
5. **A detached Accessory Structure in** Residential Zones, **regardless of the requirements for Building Permits, shall meet all Setback and separation requirements for the underlying zone except as provided herein:**

   a. A detached Structure shall meet the Setback requirements of the main Building for the Front and Street Side Setbacks.

   b. A detached Accessory Structure which does not exceed fifteen (15') feet in height and 600 sq. ft. in area, may be located within an Interior Side or Rear Setback; provided, however, that such Structure shall not be located closer than five feet to an Interior Side or Rear Lot Line.

   c. A detached Accessory Structure which exceeds fifteen (15') feet in height, or 600 square feet in area, shall maintain the same minimum Side and Rear Setbacks as required for the main Dwelling.

   d. ~~A detached Structure shall maintain a minimum 10 feet separation from other Structures.~~

   e. ~~Although not requiring a Building Permit, Accessory Structures with less than 120 square feet of floor area must meet the above minimum Setbacks.~~

   f. In the RS-6,000 and RS-10,000, RMH and MHP Zones on parcels of one-half (1/2) acre or smaller:

      1. Structures that are 120 square feet or less shall meet the Front and Street Side Setbacks but may be within six (6') feet of the main Dwelling and three (3') feet from any Interior Side or Rear Property Line.
      2. Structures that are sixty-four (64') square feet or less and eight (8') feet or less in height measured to the highest peak may have a zero (0') foot separation from the main Dwelling and a one (1') foot Interior Side or Rear Setback as long as the roof does not drain onto an adjacent property.
      3. If there is more than one (1) shed on a property, there must be at least a six (6') foot separation between sheds.

   g. ~~A detached Structure (over 120 square feet) shall maintain a minimum 10 foot separation from the main Structure.~~

   h. ~~Outdoor swimming pools, hot tubs and spas shall be considered to be a detached~~

~~Accessory Structure.~~

6. Canopies

   a. **In any residential Zone on Lots smaller than 1 acre,** ~~R, MHP, RMH Zones~~ Canopies, or roofs attached to the main Building or connecting the main Building with a detached Accessory Structure, may extend into a required Rear or Interior Side Setback provided that portions of such Structure extending into the Setback:

      1. Shall not exceed fifteen (15') feet in height nor project closer than five (5') feet to an Interior Side or Rear Lot Line;
      2. Shall be entirely open on at least three (3) sides except for necessary supporting columns; except that a roof connecting a main Building and an Accessory Structure shall be open on at least two (2) sides.

   b. In any **non-Residential** ~~Commercial~~ Zone, detached canopies shall be considered Accessory Structures and shall meet all of the Setback requirements for main Buildings. No portion of the canopy shall extend into the Setback. Canopies may be located in front of the main Building outside the required Front and Street Side Setback

7. **Administrative** Adjustments

   a. Additional projections into required Yards may be permitted per the standards of Section

Section 4.5.D: <u>Permits and Administration</u>

1. **Applicable Building, Environmental Quality and Engineering Permits apply. Planning and Zoning review shall be conducted through the issuance of such permits**
2. **Adjustments shall require issuance of an Administrative Permit subject to the provisions of Section**

   a. Findings

      1. In granting an Administrative Adjustment, the Director of Community Development shall make findings of fact that establish that the circumstances necessary for granting a variance by the Board of Adjustment, as prescribed in Section 30.8-7 (Findings) do apply.
      2. Site Area: Additional Findings

         In order to grant approval of an Administrative Adjustment allowing a reduction in minimum site area the Director must make the following additional finding:

         That the property cannot otherwise meet the minimum site area requirement of its current zoning classification.

   b. Decision of Director

      If the Director of Community Development denies an application for an

Administrative Adjustment, or, if the applicant disagrees with the conditions imposed on the granting of an Administrative Adjustment, if any, the applicant

may file for a Variance in accordance with Section 30.8 (Variances).

Chapter 5. Administration

SECTION 5.1: PERMIT APPLICATION REQUIREMENTS AND TIMEFRAMES

Section 5.1.A: Administrative Permits

1. The following information shall be submitted when applying for an **Administrative Permit.** The Director of Community Development may require additional information or plans, if they are necessary to enable a determination as to whether the circumstances prescribed for the granting of the Permit exist. The Director of Community Development may authorize omission of any or all of the plans and drawings required by this Section if they are not necessary.

    a. A completed application form including name **and signature** of the applicant, mailing address, contact person, phone number, fax number and email address for contact person, Assessor's Parcel Number, Subdivision, unit/lot number, site address/location, zoning, existing land use, lot size, description of the request, property owner's authorization by their signature and permit fee.

    b. Two copies of a Site plan drawn to scale using accurate dimensions showing all property lines, improvements, uses, landscaped areas, location of all streets or right-of-ways providing access to the Site, Easements, traffic flow and parking areas.

    c. A copy of all recorded Easement applicable to the request shall be provided.

    d. A separate Building Permit application shall be submitted for all new construction and electrical installation. Required Building Permits shall be obtained prior the initiation of construction.

    e. A separate Lighting Permit application shall be submitted for any new exterior lighting as required by Section 27: Lighting.

    f. A separate Sign Permit application shall be submitted for any new signage as required by Section 26: Signs.

    g. Prior to the issuance of a Permit a bond may be required. This deposit shall be used to defray the costs of cleanup of the property by the County in the event the permittee fails to do same.

    h. All open zoning Violations shall be addressed prior to acceptance of a permit application.

    i. All other required permits and licensing as necessary (i.e. approvals from the Sheriff's Office, Public Works or the Public Health District, Design Review Overlay, Conditional Use Permit, Variance, etc.) shall be obtained prior to the acceptance of a complete application.

2. Administrative Permit timeframes pursuant to ARS § 11-1605 are as follows:

    a. Administrative completeness shall be determined within 30 calendar days

of the submittal of a application. Applicants will be notified in writing of an incomplete application with a list of deficiencies. Notice in writing of application deficiencies shall suspend the administrative completeness timeframe until such time as all deficiencies have been addressed.

b. Substantive review of all Permit applications shall be completed within 30 calendar days from the determination that the Permit application is administratively complete. One written request for additional information may be made to the applicant during this review process.

c. The total time frame for the granting or denying of an **administrative** Permit is 60 days.

d. Timeframes are tolled and may be waived in accordance with A.R.S. §11-1601 et seq.

3. Issuance of **Administrative** Permits shall comply with the following:

   a. The proposed use will not be detrimental to health, safety, or general welfare of persons living or working in the vicinity, to adjacent property, to the neighborhood, or to the public in general;

   b. The proposed use conforms with the purposes, intent, and policies of the Comprehensive Plan and any applicable area, neighborhood, or other plan adopted by the Board of Supervisors;

   c. The proposed use conforms with the conditions, requirements, or standards of this Ordinance and any other applicable local, state, or federal requirements;

   d. The proposed use, as conditioned, would not unreasonably interfere with the use and enjoyment of nearby properties.

   e. Permits shall be issued when compliance with this Ordinance is verified. If the Community Development Director determines that the proposed use does not comply with this Ordinance, the permit shall be denied.

   f. All open zoning Violations shall be addressed prior to the acceptance of a complete Permit application.

   g. No Permit shall be issued if the property is in Violation of other laws or impairs property rights. The Director of Community Development will determine if the Violation or impairment exists with appeal to Superior Court.

4. **Revocation**

   If a zoning permit or Conditional Use Permit is revoked, a new permit for the same owner and location may not be issued for a period of at least one year from the date of revocation.

5. **Validity Limit**

The Administrative Use Permit shall be valid for the use for which the permit was granted for the length of time indicated on the permit as long as the use is in compliance with the conditions of approval and other applicable ordinances.

Section 5.1.B: Permits requiring Hearing

1. The following information shall be submitted when applying for a Permit requiring public hearing. The Director of Community Development may require additional information or plans, if they are necessary to enable a determination as to whether the circumstances prescribed for the granting of a Permit exist. The Director of Community Development may authorize omission of any or all of the plans and drawings required by this Section if they are not necessary. **15 copies shall be provided for hearing by the Planning and Zoning Commission and 7 copies shall be provided for a hearing of the Board of Adjustment.**

    a. A completed Coconino County Permit application form including, name and address of the applicant, name of contact person, phone number, fax number and email address, Assessor's Parcel Number, subdivision/unit/lot, site address/location, existing zoning, existing land use, lot size, permit request description, pre-application meeting, and property owner's authorization by their signature.

    b. A completed citizen participation plan in accordance with Section 30.3.

    c. A typewritten narrative describing the request and the precise manner of compliance with each of the applicable provisions of this Section, together with any other data pertinent to the findings prerequisite to the granting of a the Permit.

    d. Documentation shall be provided in a written description as well with supplemental data to show compliance with the Coconino County Comprehensive Plan.

    e. A list of all owners of property located within three hundred feet (300') of the exterior boundaries of the subject property; the list shall be keyed to a map showing the location of these properties.

    f. A site plan drawn to scale using accurate dimensions showing property boundaries; existing and proposed improvements and Uses; locations of driveways, pedestrian walks, landscaped areas, fences, walls, off-street parking areas including ingress and egress, traffic flow, and Easements.

    g. A copy of all recorded Easements applicable to the request.

    h. A landscape plan detailing the locations of existing vegetation (both to be retained and to be removed), the location and design of landscaped areas, the number, varieties and sizes of proposed plant materials and other landscape features including sprinkler and irrigation systems as required by Section 28: Landscaping.

    i. ~~Fifteen (15) copies of~~ architectural drawings including floor plans in sufficient

detail to determine setback and parking requirements and elevations of all proposed structures as they will appear upon completion. All exterior surfacing materials and colors shall be specified. Color renderings or paint and material samples are required.

j. Signage plan detailing all existing and proposed Signs, including their location, size, materials, color and method of illumination as required by Section 26: Signs.

k. Lighting plan including location of all outdoor lighting fixtures and description of each (i.e. Lamp Type, Lumen output, Shielding) as required by Section 27: Lighting.

l. Plans and/or a preliminary report describing the proposed provisions for storm drainage, sewage disposal and such other public improvements and utilities as the Director may require in order to give a full evaluation of the project.

m. The application shall be accompanied by a fee established by resolution of the Board of Supervisors to cover to cost of handling the application as prescribed in this Section.

2. Timeframes for Permits requiing Hearings pursuant to ARS § 11-1605 are as follows:

a. Administrative completeness pursuant to A.R.S. § 11-1605 shall be determined within 60 calendar days of the submittal of an application. Applicants will be notified in writing of an incomplete application with a list of deficiencies. Notice in writing of application deficiencies shall suspend the administrative completeness timeframe until such time as all deficiencies have been addressed.

b. Substantive review of applications shall be completed within 120 calendar days from the determination that the application is administratively complete. One written request for additional information may be made to the applicant during this review process. To accommodate changing conditions or plans, the applicant may agree to respond to additional requests for information. The substantive review includes investigation and report on the case. The substantive review timeframe is suspended during the public hearing process. The public hearing process begins at the posting of the case and is complete upon mailing of the e permit resolution per A.R.S § 11-1605 (c)(8)(c).

c. The total time for the granting or denying of the Permit approval is 180 days.

d. Timeframes are tolled and may be extended in accordance with A.R.S. §11-1601 et seq

Section 5.2.A: Purposes

The purpose of a pre-application review is to determine application requirements and familiarize the applicants with the review process and procedures, identify land use and development policies which may affect the development proposal and address potential problems as early in the process as possible.

Section 5.2.B: Administration

1. Pre-Application Review Requirements

   Pre-application reviews must occur within 6 months prior to the submittal of an application. The following applications are required to have a pre-application review prior to the submittal of an application, Conditional Use Permits, Zone Changes, Subdivisions, Design Review Overlay approval, Amendments, Medical Marijuana Facilities, Variances and Abandonments.

2. Request for Pre-Application Review

   Applicants shall request a pre-application review unless waived by the Director. No formal applications are required. Applicants are strongly encouraged to develop a preliminary Site plan depicting property lines, locations of existing and proposed Structures, parking and landscaped areas, property constraints including significant topographic features or flood hazard areas to be utilized during review. A narrative report is also recommended detailing the specific request and potential operation.

3. Pre-Application Review Meeting

   The Director shall maintain a pre-application meeting schedule. The pre-application meeting includes, but is not limited to, representatives planning, zoning, building, flood control, engineering, hydrology, and environmental services. Staff shall provide applicants with information on process requirements including, but not limited to, application submittal requirements, citizen participation plan and notification requirements, and background information or additional studies necessary to adequately assess a project. Whether or not a development proposal meets relevant ordinances and plan policies may be discussed, but final staff recommendation will not be made until a formal application is evaluated.

4. Pre-Application Review Waiver

   The Director may waive the requirement for pre-application review upon formal request by the applicant.

Section 5.3.A: Purposes

In order to maximize the opportunity for citizen involvement in the rezoning and conditional use permit processes that are described in the following sections, and to resolve any neighborhood issues at an early stage in the process, the following requirements shall be included in the citizen participation process.

Section 5.3.B: Administration

1. Citizen Participation Plan
   a. Every zone change and conditional Use permit application shall include a citizen participation plan that must be completed prior to the submittal of an application.
   b. The purpose of the citizen participation plan is to achieve the following:
      1. Ensure that applicants pursue early and effective citizen participation in conjunction with their applications, giving them the opportunity to understand and try to mitigate any real or perceived impacts their application may have on the community or on the neighborhood;
      2. Ensure that the citizens and property owners of Coconino County have an adequate opportunity to learn about applications that may affect them and to work with applicants to resolve concerns at an early stage of the process; and
      3. Facilitate ongoing communication between the applicant, interested citizens and property owners, County staff, and elected officials throughout the application review process.
   c. The citizen participation plan is not intended to produce complete consensus on all applications, but to encourage applicants to be good neighbors and to allow for informed decision making.
   d. At a minimum, the citizen participation plan shall include the following:
      1. Which residents, property owners, interested parties and public and private agencies may be affected by the application;
      2. How those interested in and potentially affected by an application will be notified that an application has been made;
      3. How those interested and potentially affected parties will be informed of the substance of the zone change, amendment, or development proposed by the application;
      4. How those interested and affected parties will be provided an opportunity to discuss the applicant's proposal with the applicant and express any concerns, issues, or problems they may have with the proposal in advance of the public hearing;

5. The applicant's schedule for completion of the citizen participation plan; and

6. How the applicant will keep the County Community Development Department informed on the status of citizen participation efforts.

e. Within six (6) months of submitting an application for a zone change or a conditional Use permit applicants must conduct a neighborhood community meeting.

1. The meeting must be conducted in the general vicinity of the property involved in the application, subject to the approval of the Director. The meeting serves as a forum for information exchange between applicants and affected members of the public.

2. Affected members of the public shall be noticed in writing of a neighborhood community meeting not less than 10 days or more than 21 days prior to the meeting.

3. An applicant may make a written request and receive a written determination whether; due to impractical circumstances, such as a site surrounded by federal lands, the requirement for a community meeting may be waived by the Director. At a minimum the request must explain why the applicant's citizen participation plan provides other adequate, alternative opportunities for citizens to express any concerns, problems or issues they may have with the proposal in advance of the public hearing. The Director shall make their determination a part of the written record in the case.

f. The level of citizen interest and area of involvement will vary depending on the nature of the application and the location of the Site. The target area for notification will be determined after consultation with Department of Community Development staff. At a minimum, the target area shall include the following per A.R.S. § 11-814:

1. Property owners within the 300 foot public hearing notice area required or further as required by other sections of this Ordinance;

2. The head of any property owners' association within the notice area required by other sections of this Ordinance; and

3. Other potentially affected property owners outside of the legal notice area as determined by Community Development Department staff; and

4. Other interested parties who have requested that they be placed on a list of interested parties maintained by the Community Development Department.

g. These requirements apply in addition to any notice provisions required elsewhere in this Ordinance.

h. The applicant may not submit a citizen participation plan until after a pre-application review meeting and consultation with Community Development Department staff.

2. Citizen Participation Report

   a. This section applies only when a citizen participation plan is required by this Ordinance.

   b. The applicant shall provide a written report on the results of their citizen participation effort prior to the notice of public hearing. This report shall be attached to the staff report submitted to the Planning and Zoning Commission.

   c. At a minimum, the citizen participation report shall include the following information:

      1. Details of the techniques the applicant used to involve the public, including:

         i. Dates and locations of all meetings where citizens were invited to discuss the applicant's proposal;

         ii. Content, dates mailed, and numbers of mailings, including letters, meeting notices, newsletters and other publications;

         iii. Where residents, property owners, and interested parties receiving notices, newsletters, or other written materials are located; and

         iv. The number of people that participated in the process the percentage of those notified that participated in the process.

      2. A summary of concerns, issues, and problems expressed during the process, including:

         i. The substance of the concerns, issues, and problems;

         ii. How the applicant has addressed or intends to address concerns, issues and problems expressed during the process; and

         iii. Concerns, issues and problems the applicant is unwilling or unable to address and why.

Section 5.4.A: Duties of the Director

The Director of Community Development shall set the time and place of public hearings required by this Ordinance to be held by the Planning and Zoning Commission or Board of Adjustment, provided that the Commission or Board may change the time or place of a hearing with 24 hours advance notice. However, the Planning and Zoning Commission or Board of Adjustment shall hold a public hearing within seventy-five (75) days after a complete application has been filed unless extended at the request of the applicant.

Section 5.4.B: Duties of the Clerk of the Board

The Clerk of the Board shall set the time and place of public hearings required by this Ordinance to be held by the Board of Supervisors, provided that the Board may change the time or place of a hearing with 24 hours advance notice. The Board of Supervisors shall hold a public hearing on a rezoning request, or an amendment approved by the Commission not less than sixty (60) days after notice of such decision or appeal has been filed with the Clerk of the Board unless the applicant or appellant shall consent to an extension of time. Notice of a public hearing shall be given not less than 15 days nor more than 30 days prior to the date of the hearing by publication in a newspaper of general circulation. When the hearing concerns a matter other than an amendment to the text of this Ordinance, the property shall be posted at least 15 days prior to the hearing. Notices of public hearings before the Planning and Zoning Commission, Board of Adjustment, or Board of Supervisors shall be mailed to all persons whose names appear on the latest adopted tax roll of Coconino County as owning property within 300 feet of the exterior boundaries of the property that is the subject of the hearing.

Section 5.5.A: Appeal of Decision of Planning and Zoning Commission

Where this Ordinance provides for appeal to the Board of Supervisors of an administrative decision of the Planning and Zoning Commission, the appeal shall be made within fifteen (15) days of the date of the decision by filing a letter of appeal with the Director of Community Development. The appeal shall state in writing the grounds for the appeal including specific conditions of concern if applicable.

Section 5.5.B: Board Action on Appeal

The Board of Supervisors shall hold at least one public hearing on a decision of the Director or Planning and Zoning Commission which has been appealed. The hearing shall be held within ninety (90) days from the filing of the appeal unless an extension is requested by the applicant; the time and place of the hearing shall be set by notice given as prescribed in Section 30.6. The Board shall render a decision on an appeal within forty (40) days following the closing of the public hearing on the appeal unless an extension is requested by the applicant. Failure of the Board to act within the time period prescribed by this Section shall be deemed approval of the Planning and Zoning Commission action. The Board shall review appeals de novo. The Board may affirm, reverse or modify a decision of the Planning and Zoning Commission. The decision of

the Board of Supervisors shall be final.

Section 5.6: Administrative Adjustments

Section 5.6.A: Purpose

The purpose of this Section is to grant authority to the Director of Community Development to take action on requests for minor modifications or adjustments to certain requirements of this Ordinance when such requests constitute a reasonable use of property not permissible under a strict, literal interpretation of the regulations.

Section 5.6.B: Administration

For the purpose of administering this Section, an Administrative Adjustment is any modification of the terms or requirements of this Ordinance, which, if granted, would allow the following:

a. A decrease of not more than 10% of the required building site area, width or depth.

b. A decrease of not more than 20% of the required width of a side yard or the yard between buildings.

c. A decrease of not more than 20% of the required front or rear yard.

d. An increase of not more than 20% in the permitted height of a fence or wall.

e. An increase of not more than 10% of the permitted projection of steps, stairways, landings, eaves, overhangs, masonry chimneys, and fireplaces into any required front, rear, side or yard between buildings.

f. An increase of not more than 10% of the permitted height or areas of signs.

g. A decrease in the number of required parking spaces of not more than 10% or a decrease of one space if the total number of spaces is less than 10.

h. An increase of not more than 10% in the maximum allowable lot coverage.

i. An increase of not more than 10% in the permitted height of buildings.

Section 5.7.A: Purposes

In order to give the Use regulations the flexibility necessary to achieve the objectives of this Section, in certain zones conditional Uses are permitted, subject to the granting of a Conditional Use Permit. Because of their unusual characteristics, conditional Uses require special consideration so that they may be located properly with respect to the objectives of the zoning regulations and their effects on surrounding properties. In order to achieve these purposes, the Planning and Zoning Commission is empowered to grant and to deny applications for Use permits for such Conditional Uses in such zones as are prescribed in the zone regulations and to impose reasonable conditions upon the granting of conditional use permits, subject to the right of appeal to the Board of Supervisors.

Section 5.7.B: Administration

1. **Conditional Use Permits shall be subject to the provisions of Section**
2. Investigation and Report

   The Director of Community Development shall make an investigation of the application and shall prepare a report thereon which shall be submitted to the Planning and Zoning Commission and made available to the applicant prior to the public hearing.

3. Public Hearing

   The Planning and Zoning Commission shall hold at least one public hearing on each application for a conditional use permit. The hearing shall be set and notice given as prescribed in Section 30.5 (Public Hearing Time and Notice). At the public hearing, the Commission shall review the application and drawings submitted therewith and shall receive pertinent evidence concerning the proposed Use and the proposed conditions under which Use would be operated or maintained, particularly with respect to the findings prescribed in Section 30.4-7.

4. Action of the Planning and Zoning Commission

   Within forty (40) days following the closing of the public hearing on a Conditional Use Permit application, the Planning and Zoning Commission shall act on the application. The Commission may grant, by resolution, a Conditional Use Permit as the permit was applied for or in modified form, or the application may be denied. A Conditional Use Permit may be revocable, may be granted for a limited time period, or may be granted subject to such conditions as the Commission may prescribe. Conditions may include, but shall not be limited to, drainage, sewage, water and other utility requirements, requiring special yards, open spaces, buffers, fences and walls; requiring installation and maintenance of landscaping; requiring street dedications and improvements; regulation of points of vehicular ingress and egress; regulation of traffic circulation; regulation of signs; regulation of hours of operation and methods of operating; control of potential nuisances; prescribing standards for maintenance of buildings and grounds; prescription of development schedules and

development standards; and such other conditions as the Commission may deem necessary to insure compatibility of the Use with surrounding developments and Uses and to preserve the public health, safety and welfare. The Commission may grant waivers from the Zoning Ordinance in conjunction with the approval of a Conditional Use Permit for such property development standards and performance standards as: fences, walls, screening and landscaping; site area; width and depth; front, rear and side setbacks; lot coverage; height of structures; distance between Structures; usable open space; signs; off-street parking facilities or parking lot standards; or frontage on a public street.

5. Findings

The Planning and Zoning Commission shall make the following findings before granting a Conditional Use Permit:

1. That the proposed location of the Conditional Use is in accord with the objectives of this Ordinance and the purpose of the Zone in which the site is located.
2. That the proposed location of the Conditional Use and the conditions under which it would be operated or maintained will not be detrimental to the public health, safety, or welfare, or materially injurious to properties or improvements in the vicinity.
3. That the proposed Conditional Use will comply with each of the applicable provisions of this Ordinance, except for approved variances.
4. That the proposed Conditional Use is consistent with and conforms to the goals, objectives and policies of the Comprehensive Plan or Specific Plan for the area.

6. Effective Date of the Use Permit

The decision of the Planning and Zoning Commission shall be effective fifteen (15) days at the close of business from the date of the decision and upon receipt by the Department of Community Development of a signed agreement to the conditions of approval, unless prior to the expiration of said fifteen (15) day period an appeal has been filed with the Board of Supervisors.

7. Appeal to Board of Supervisors

A decision of the Planning and Zoning Commission may be appealed within fifteen (15) days to the Board of Supervisors by the applicant or any other person as prescribed in Section 30.7 (Appeals: Board Review); or by appeal of an individual member of the Board without fee.

8. Determination by the Board of Supervisors

The Board of Supervisors shall hold a public hearing on a Conditional Use Permit as prescribed in Section 30.7-3 if an appeal has been filed within the prescribed fifteen (15) day appeal period. The decision of the Board shall be final.

9. Lapse of Conditional Use Permit

A Conditional Use Permit associated with construction shall lapse and shall become

void one year following the date on which the Conditional Use Permit became effective, unless prior to the expiration of one year, a building permit is issued and construction is commenced and diligently pursued toward completion on the site which was the subject of the use permit application, or a Certificate of Occupancy is issued for the structure which was the subject of the Use permit application, or the site is occupied if no building permit or Certificate of Occupancy is required, unless a longer time frame is approved by the Planning and Zoning Commission. A request for extension may be submitted to the Planning & Zoning Commission which will be evaluated based on current circumstances including, but not limited to, percentage of project completed, estimated completion date, surrounding land use and citizen input.

1. A Conditional Use Permit shall also lapse if the use for which the permit is approved is terminated for a period of two (2) years. Recommencement of the Use after the two (2) year period of inactivity shall require filing a new application following the requirements and processes specified in Sections 30.3-2 through 30.3-10.

10. Renewal of Conditional Uses

a. A Conditional Use Permit subject to expiration may be renewed, provided that prior to the expiration date, an application for renewal of the use permit is filed with the Department of Community Development.

b. Upon application for renewal, a case review and site inspection shall be made to determine compliance with conditions of approval. Legal notice of application for renewal shall be posted on the property within public view, mailed to property owners within a minimum of 300 feet radius and advertised in a newspaper for a minimum of fifteen (15) days prior to determination of approval for renewal.

1. A Conditional Use Permit may be renewed administratively where:

i. The current Conditional Use Permit remains valid and in full force; and

ii. There have not been any complaints; and

iii. The Use of the property remains the same as the approved Use; and

iv. The use is in compliance with conditions of approval; and

v. There are no active violations of the zoning code at the time of renewal; and

vi. No modifications to the Use or conditions of approval are requested by the applicant or staff

2. Where the Conditional Use Permit is approved administratively, all prior conditions of approval shall remain in full force and effect.

i. A Conditional Use Permit must be renewed upon a hearing before the Planning and Zoning Commission where:

ii. Any complaint is lodged with the Department during the current term of the Conditional Use Permit or during the notice period for

the application of renewal; or

iii. Any conditions of approval are not met to the satisfaction of the Department; or

iv. A change in the described Use of the property has occurred; or

v. A change in the predicted impacts of the use has occurred; or

vi. There is a violation of the zoning code or any other applicable law, or

vii. A request to modify the Use or conditions of approval is made

Additional fees may apply to Conditional Use Permits renewed by the Planning and Zoning Commission.

c. An application for renewal of a Conditional Use Permit not eligible for renewal pursuant to Section 30.4.L.a.ii above may be granted or denied by the Planning and Zoning Commission subject to the modification of existing conditions of approval and/or the addition of new conditions of approval. A primary consideration of renewal is compliance with the original conditions of approval. Such applications shall be subject to the provisions of Section 30.4.

11. Modification of Conditional Use

a. Sections 30.4-2 through 30.4-12 shall apply to an application for modification, expansion, or other change in a conditional use.-Revocation

b. Failure to comply with any of the conditions of approval is a violation of the Zoning Ordinance and may result in the revocation of a Conditional Use Permit. Revocation shall require a public hearing before the Planning & Zoning Commission in accordance with public notice criteria. The Planning and Zoning Commission shall hold a public hearing within ninety (90) days of sending notice to both applicant and property owner, in accordance with the procedure prescribed in Section 30.4-5 (Public Hearing) and 30.6. If not satisfied that the regulation, general provisions, or conditions are being complied with, the Commission may revoke the Conditional Use Permit or take such action as may be necessary to ensure compliance with the regulation, general provisions, or conditions. The decision may include time frames for ensuring compliance or decommissioning the project unless an appeal has been filed within the prescribed fifteen (15) day appeal period, in which case Section 30.7-3 (Board Action on Appeal) shall apply.

12. New Applications

Following the denial of a Conditional Use Permit application or the revocation of a Conditional Use Permit, no application for a Conditional Use Permit for the same or substantially the same Conditional Use on the site shall be filed within one (1) year from the date of denial or revocation of the Conditional Use Permit.

13. Conditional Use Permit to Run with the Land

A Conditional Use Permit granted pursuant to the provisions of this Section shall run with the land and shall continue to be valid upon a change in ownership of the site or structure which was the subject of the use permit application.

14. Use Permit and Change of Zone Filed Concurrently

Application for a Conditional Use Permit may be made at the same time as an application for a change in zone boundaries including the same property, in which case the Planning and Zoning Commission shall hold the public hearing on the zoning reclassification and the Conditional Use Permit at the same meeting and may combine the required hearings. For the purposes of this Section, the date of the Commission decision on the Conditional Use Permit application shall be deemed to be the same as the date of enactment by the Board of Supervisors of an ordinance changing the zone boundaries, provided that if the Board modifies a recommendation of the Commission on a zoning reclassification, the Conditional Use Permit application shall be reconsidered by the Commission in the same manner as a new application.

Section 5.8.A: Purposes and Authorization

a. Variances from the terms of the Zoning Ordinance shall be granted only when, because of special circumstances applicable to the property, including size, shape, topography, location or surroundings, the strict application of the Zoning Ordinance deprives such property of privileges enjoyed by other property in the vicinity and under identical zoning classification. Any Variance granted shall be subject to such conditions as will assure that the adjustment thereby authorized shall not constitute a grant of special privileges inconsistent with the limitations upon other properties in the vicinity and zone in which such property is situated.

b. The power to grant Variances does not extend to Use regulations. Flexibility to the zoning regulations is provided in the Conditional Use provisions of this Ordinance.

c. The Board of Adjustment may grant Variances to the regulations prescribed by this Section, in accord with the procedure prescribed in this Section, with respect to fences, walls, hedges, screening, and landscaping; site area, width, and depth; front, rear, and side yards; coverage, height of structures; distances between structures; usable open space; signs, off-street parking facilities, or frontage on a public street.

Section 5.8.B: Administration

1. Investigation and Report

   The Director of Community Development shall make an investigation of each application that is the subject of a public hearing and shall prepare a report thereon which shall be submitted to the Board of Adjustment and made available to the applicant prior to the public hearing.

2. Public Hearing

   The Board of Adjustment shall hold a public hearing on an application for a Variance. The hearing shall be set and notice given as prescribed in Section 30.6 (Public Hearing Time and Notice). At a public hearing, the Board shall review the application, statements, and drawings submitted therewith and shall receive pertinent evidence concerning the Variance, particularly with respect to the findings prescribed in Section 30.8-7 (Findings).

3. Action by the Board of Adjustment

   Within forty (40) days following the close of the public hearing on a Variance application, the Board of Adjustment shall act on the application. The Board may grant, by resolution, a Variance as the Variance was applied for or in modified form, or the application may be denied. A Variance may be revocable, may be granted for a limited time period, or may be granted subject to conditions as the Board may prescribe. Upon failure to act within the prescribed forty (40) day period, an appeal

may be taken to the Superior Court as prescribed in ARS §11-807.

4. Findings

The Board of Adjustment may grant a Variance to a regulation prescribed by this Ordinance with respect to fences, walls, hedges, screening, or landscaping; site area, width, or depth; front, rear, or side yards; coverage, height of structures, distances between structures, usable open space, or frontage on a public street, as the Variance was applied for or in modified form, if, on the basis of the application and the evidence submitted, the Board of Adjustment makes findings of fact that establish that the circumstances prescribed in paragraphs A, B, or C and in paragraphs D and E do apply.

1. That the strict or literal interpretation and enforcement of the specified regulation would result in practical difficulty or unnecessary physical hardship inconsistent with the objectives of this Ordinance.
2. That there are exceptional or extraordinary circumstances or conditions applicable to the property involved which do not apply generally to other properties in the same zone.
3. That strict or literal interpretation and enforcement of the specified regulation would deprive the applicant of privileges enjoyed by the owners of other properties in the same zone.
4. That the granting of the Variance as conditioned will not constitute the granting of a special privilege inconsistent with the limitations on other properties in the same zone.
5. That the granting of the Variance will not be detrimental to the public health, safety, or welfare, or materially injurious to properties or improvements in the vicinity.

a. Signs: Additional Findings

The Board of Adjustment may grant a Variance to a regulation prescribed in this Ordinance with respect to signs as the Variance was applied for or in modified form, if, on the basis of the application and the evidence submitted, the Board of Adjustment makes findings of fact that establish that the circumstances prescribed in Section 30.8-7 (Findings) apply and the following circumstances also apply.

i. That the granting of the Variance will not detract from the attractiveness or orderliness of the surrounding neighborhood or infringe on the similar rights of others.
ii. That the granting of the Variance will not create a hazard to public safety.

b. Parking: Additional Findings

The Board of Adjustment may grant a Variance to a regulation prescribed by this Ordinance with respect to off-street parking facilities as the Variance was applied for or in modified form, if, on the basis of the application and the evidence submitted, the Board of Adjustment makes findings of fact that

establish that the circumstances prescribed in Section 30.8-7 apply and the following circumstances apply.

i. That neither present nor anticipated future traffic volumes generated by the use of the site or the uses of sites in the vicinity reasonably require strict or literal interpretation and enforcement of the specified regulation.

ii. That the granting of the Variance will not result in the parking or loading of vehicles on public streets in such a manner as to interfere with the free flow of traffic on the streets.

iii. That the granting of the Variance will not create a safety hazard or any other condition inconsistent with the objectives of this Ordinance.

5. Appeals to Superior Court

A decision of the Board of Adjustment on a Variance may be appealed within thirty (30) days to the Superior Court by the applicant or any other aggrieved person as prescribed in ARS 11-807.

6. Effective Date of Variance

A decision of the Board of Adjustment on a Variance shall be final thirty (30) days after the date of the decision and upon receipt by the Department of Community Development of a signed agreement to the conditions of approval, unless an appeal has been filed.

7. Lapse of Variance

a. A Variance shall lapse and shall become void one year following the date on which the Variance became effective unless prior to the expiration of one year, a building permit is issued and construction is commenced and diligently pursued toward completion on the site which was the subject of the variance application, or a permit is issued authorizing occupancy of the site or structure which was the subject of the variance application, or the site is occupied if no building permit or Certificate of Occupancy is required.

b. A Variance may be renewed for an additional period of one year provided that prior to the expiration of one year from the date when the Variance or the renewal became effective, an application for renewal of the Variance is filed with the Director of Community Development.

c. A Variance shall also lapse if the use for which the Variance is approved is terminated for a period of one year. Recommencement of the use after the one year period of inactivity shall require filing a new Variance application according to the process and requirements listed in Sections 30.7-1 through 30.7-15.

8. A Variance subject to expiration may be renewed, provided that prior to the expiration date, an application for renewal of the Variance is filed with the Board of Adjustment.

The Board of Adjustment may grant or deny an application for renewal of a Variance subject to the modification of existing conditions of approval and/or the addition of new conditions of approval. A primary consideration of renewal is compliance with

conditions of approval.

9. Revocation

   Failure to comply with any of the conditions of approval is a violation of the Zoning Ordinance and may result in the revocation of a Variance. Revocation shall require a public hearing before the Board of Adjustment Commission in accordance with public notice criteria. The Board of Adjustment shall hold a public hearing within ninety (90) days of sending notice to both applicant and property owner, in accordance with the procedure prescribed in Section 30.8-5 (Public Hearing. If not satisfied that the regulation, general provisions, or conditions are being complied with, the Board may revoke the Variance or take such action as may be necessary to ensure compliance with the regulation, general provisions, or conditions. The decision may include time frames for ensuring compliance or decommissioning the project.

10. New Application

    Following the denial or revocation of a Variance application, no application for the same or substantially the same Variance on the site or substantially the same site shall be filed within one year from the date of denial or revocation of the Variance.

11. Variance Related to Plans Submitted

    Unless otherwise specified at the time a Variance is granted, it shall apply only to the plans and drawings submitted as part of the application.

Section 5.9: Determination As To Uses Not Listed

Section 5.9.A: Purposes

In order to ensure that the zoning regulations will permit all similar Uses in each zone, the Director of Community Development, upon his/her own initiative or upon written request shall determine whether a Use not specifically listed as a permitted or conditional Use in any zone shall be deemed a permitted Use or a conditional Use in any one or more zones on the basis of similarity to Uses specifically listed. The determination of the Community Development Director shall be adopted through the Planning and Zoning Commission consent agenda. The Director of Community Development may request the determination be made directly by the Planning and Zoning Commission. The procedures of this Section shall not be substituted for the amendment procedure as a means of adding new Uses to the list of permitted or conditional uses.

Section 5.9.B: Administration

1. Request for Determination

   Requests for determination of similar Uses shall be made in writing to the Director of Community Development and shall include a detailed description of the proposed Use and such other information as may be required by the Director to facilitate the determination.

2. Investigation and Report

   The Director of Community Development shall make such investigations of the request as necessary to compare the nature and characteristics of the proposed Use with those Uses specifically listed and shall make a report of his findings to the Planning and Zoning Commission.

3. Determination

   The determination of the Director of Community Development and/or the Planning and Zoning Commission shall be effective fifteen (15) days from the date of the decision unless an appeal is filed.

4. Appeal to Board of Supervisors

   A decision of the Planning and Zoning Commission may be appealed within fifteen (15) days to the Board of Supervisors by the applicant or any other person, as prescribed in Section 30.6 (Appeals: Board Review), or by any member of the Board of Supervisors without fee.

5. Determination by Board of Supervisors

   The Board of Supervisors shall make a determination as prescribed in Section 30.6-3 (Board Action on Appeal) if an appeal has been filed within the prescribed fifteen (15) day appeal period or upon the initiative of the Community Development staff. The decision of the Board shall be adopted as a resolution and shall be final.

Section 5.10: Interpretations

Section 5.10.A: Purposes and Authorizations

The Board of Adjustment may interpret the Zoning Ordinance if the meaning of any word, phrase or section is in doubt, if there is a dispute over a staff interpretation or if the location of a district boundary is in doubt. Appeals to the Board of Adjustment may be taken by any person who feels that there is an error or doubt in the interpretation of the ordinance pursuant to ARS § 11-816.

Section 5.10.B: Request for Interpretation

All requests for interpretation shall be made in writing to the Director of Community Development. Interpretations shall be submitted to the Board of Adjustment for review based on their next available calendared meeting.

SECTION 5.11: SUBSTANTIVE POLICY STATEMENT

Section 5.11.A: Purpose and Authority

Substantive policy statements are written expressions intended to inform the general public of the department's current approach to, or opinion of, the requirements of the federal or state constitution, federal or state statute, administrative rule or regulation, or final judgment of a court of competent jurisdiction, including, where appropriate, the agency's current practice, procedure or method of action based upon that approach or opinion. A substantive policy statement is advisory only and does not include internal procedural documents which only affect the internal procedures of the agency and does not impose additional requirements or penalties on regulated parties, confidential information or rules made in accordance with this Ordinance.

Section 5.11.B: Administration

1. Adoption

   Substantive policy statements are adopted at the discretion of the Community Development Director. All substantive policy statements are reviewed on an annual basis and updated as required.

2. Access

   Substantive policy statements are available for inspection at the Community Development office or on the Coconino County website.

3. Format

   All substantive policy statements shall include the effective date, policy number, title, purpose, background, policy statement, and information pertaining to the approval of the substantive policy statement and any previous substantive policy statements affected or revised by the new substantive policy statement.

Section 5.12.A: Purpose

The zoning map and zoning regulations may be amended by changing the boundaries of any zone or by changing any zone regulation or any other provision of this Ordinance in accord with the procedure prescribed in this Section.

Section 5.12.B: Administration

1. **Permits shall be subject to the provisions of Section**
2. Initiation
   a. A change in the boundaries of any zone may be initiated by a property owner or authorized agent of a property owner by filing an application for a change in zone boundaries as prescribed in this Section.
   b. A change in the boundaries of any zone or change in the regulations may be initiated by the Planning and Zoning Commission or the Board of Supervisors.
3. Conformity with Comprehensive Plan

   An application for a change in zone classification which does not conform to the land use designation as identified in the Comprehensive Plan shall not be processed until an amendment to the Comprehensive Plan has been filed, as prescribed in Section 31.2 (Amendments to Comprehensive Plan).
4. Investigation and Report

   The Director of Community Development shall make an investigation of the application or proposal and shall prepare a report thereon which shall be submitted to the Planning and Zoning Commission and to the applicant prior to the public hearing.
5. Public Hearing

   The Planning and Zoning Commission shall hold at least one public hearing on each application for a change in zone boundaries or for a change of the zoning regulations. The hearing shall be set and notice given as prescribed in Section 30.6 (Public Hearing Time and Notice).
6. Public Hearing Procedure

   At the public hearing, the Planning and Zoning Commission shall review the application or the proposal and may receive pertinent evidence as to why or how the proposed change is consistent with the objectives of this Ordinance, the Comprehensive Plan and the development policies of the County.
7. Action by the Planning and Zoning Commission
   a. Within forty (40) days following the closing of the public hearing, the Planning and Zoning Commission shall make a decision based on the following findings:

1. That the change is consistent with the goals, objectives and policies of the Comprehensive Plan and this Ordinance.
2. That the change is in the interest of or will further the public health, safety, comfort, convenience and welfare.
3. That the change will not adversely affect the established character of the surrounding neighborhood nor be detrimental to adjacent properties.

b. Based on these findings, the Commission shall recommend that the application be approved, approved in modified form, or denied. The Commission may waive Ordinance requirements pursuant to §30.3-6 at the time of approval of the application. Said recommendation shall be transmitted to the Board of Supervisors for final hearing and disposition.

8. Action by the Board of Supervisors

a. If the Planning & Zoning Commission has held a public hearing, the Board of Supervisors may adopt the recommendations of the commission through use of a consent calendar without holding a second public hearing if there is no objection, request for public hearing or other protest. If there is an objection the Board of Supervisors shall hold at least one public hearing on an application or a proposal within ninety (90) days after the Planning and Zoning Commission hearing. The hearing shall be set and notice given as prescribed in Section 30.6 (Public Hearing Time and Notice). Within forty (40) days following the closing of a public hearing, the Board shall make a decision based on the findings required by Section 30.5-9.

1. If the Board finds that the change is consistent with the findings required by Section 30.5-9, it shall approve an ordinance amending the zoning map or zoning regulations, whichever is appropriate.
2. The Board may modify a decision of the Planning and Zoning Commission recommending the granting of an application or adoption of a proposal, the Board may also waive Ordinance requirements set out in §30.4-6. However, prior to making a final decision on the amendment or proposal, the Board may, but shall not be required to, submit any or all modifications to the Commission for reconsideration at a public meeting. The Commission may, but is not required to, provide supplemental comments on the modifications to the Board. The Board may consider any supplemental comments from the Commission before making the findings required by Section 30.5-9 and rendering a final decision. Failure of the Commission to report within 30 days after receipt of the Board request shall be deemed concurrency.
3. If the Board finds that the change is not consistent with the findings required by Section 30.5-9, it shall deny the application or reject the proposal.

b. In accordance with A.R.S. § 11-829, if twenty percent (20%) of the owners of property by area and number within the zoning area (for the purpose of this Section "zoning area" means the area within three hundred feet of the proposed amendment or change) file a protest to the proposed change, the change shall

not be made except by a three-fourths vote of all members of the Board. If any members of the Board are unable to vote on the question because of a conflict of interest, the required number of votes for the passage of the question is three-fourths of the remaining membership of the Board, except that the required number of votes in no event shall be less than a majority of the full membership of the Board. In calculating the owners by area, only that portion of a lot or parcel of record situated within three hundred feet of the property to be rezoned shall be included. In calculating the owners by number or area, County property and public Rights-of-Way shall not be included.

9. New Application

   Following the denial of an application for change in zone boundaries or a change in the zoning regulations, an application or request for the same or substantially the same change on the same or substantially same property shall not be filed within one year of the date of denial.

10. Conditional Zoning

    The Board may approve a change of zone conditioned on a schedule for development of the specific Use or Uses for which the rezoning is requested. If at the expiration of this period the property has not been improved for the Use for which it was conditionally approved, the Board after notification by registered mail to the owner and applicant who requested the rezoning, shall schedule a public hearing to grant an extension, determine compliance with the schedule for development, or cause the property to revert to its former zoning classification.

11. Change of Zone Accompanied by a Subdivision Plat

    When a zone change request is accompanied by a preliminary subdivision plat, the change of zoning shall not vest or become effective until recordation of a final plat.

SECTION 5.13: COMPREHENSIVE PLAN

Section 5.13.A: Applicability of State Law

Except as otherwise specifically provided herein, the provisions of the Arizona Revised Statutes, Title 11 relating to the adoption, amendment, effect and all other aspects of comprehensive plans shall apply to Coconino County.

Section 5.13.B: Purposes

Section 5.13.C: Administration

1. Amendments to Comprehensive Plan or ~~Specific~~ **Area** Plans

    a. The Comprehensive Plan of Coconino County or any part or element thereof or any Specific Plan for individual communities may be amended as frequently in any calendar year as may be determined by the Board of Supervisors to be in the public interest.

    b. An amendment to the Comprehensive Plan or any part or element thereof or any Specific Plan may be initiated by:

        1. The Board of Supervisors;
        2. The Planning and Zoning Commission;
        3. The owner of the property in question.

    c. However, any amendment initiated by the property owner shall be made by application. The following information shall be submitted when applying for an Amendment to change any Zoning Ordinance regulation:

        1. A completed Coconino County Plan/Ordinance Amendment application form including name and address of the applicant, name of contact person, phone number, fax number and email address, description of the request, and pre-application meeting date.
        2. A typewritten narrative describing the request and the precise manner of compliance with each of the applicable provisions of this Section, together with any other data pertinent to the findings prerequisite to the granting of an amendment.
        3. Documentation shall be provided in a written description as well with supplemental data to show overall compliance with the Coconino County Comprehensive Plan.
        4. A citation of the specific section(s) of the applicable Plan to be amended and specific language proposed.
        5. The application shall be accompanied by a fee established by resolution of the Board of Supervisors to cover the cost of processing the application as prescribed in this Section.

    d. Any hearing held in conjunction with an amendment to the Zoning Ordinance

for the purpose of bringing zoning into consistency with the Comprehensive Plan or a Specific Plan may be held at any time after the date on which an amendment to the Comprehensive Plan or any part or element thereof or any Specific Plan has been recommended for adoption by the Planning and Zoning Commission; provided, however, that no such amendment to the Zoning Ordinance shall be adopted by the Board of Supervisors until the Board has first adopted the appropriate amendment to the Comprehensive Plan or applicable Specific Plan.

2. Amendment Review Timeframes

   a. Administrative completeness pursuant to ARS § 11-605 shall be determined within 60 calendar days of the submittal of an amendment application. Applicants will be notified in writing of an incomplete application with a list of deficiencies. Notice in writing of application deficiencies shall suspend the administrative completeness timeframe until such time as all deficiencies have been addressed.

   b. Substantive review of all amendment applications shall be completed within 250 calendar days from the determination that the amendment application is administratively complete. One written request for additional information may be made to the applicant during this review process. The substantive review includes investigation and report on the case, public hearing, action of the Planning & Zoning Commission, and action by the Board of Supervisors. The applicant may waive the timeframe constraints of this review.

3. Investigation and Report

   The Director of Community Development shall make an investigation of the application or proposal and shall prepare a report thereon which shall be submitted to the Planning and Zoning Commission and to the applicant prior to the public hearing.

4. Public Hearing

   The Planning and Zoning Commission shall hold at least one public hearing on each application for a change in zone boundaries or for a change of the zoning regulations. The hearing shall be set and notice given as prescribed in Section 30.6 (Public Hearing Time and Notice).

5. Public Hearing Procedure

   At the public hearing, the Planning and Zoning Commission shall review the application or the proposal and may receive pertinent evidence as to why or how the proposed change is consistent with the objectives of this Ordinance, the Comprehensive Plan and the development policies of the County.

6. Action by the Board of Supervisors

   If the Planning & Zoning Commission has held a public hearing, the Board of Supervisors may adopt the recommendations of the commission through use of a consent calendar without holding a second public hearing if there is no objection, request for public hearing or other protest. If there is an objection the Board of

Supervisors shall hold at least one public hearing on an application or a proposal within ninety (90) days after the Planning and Zoning Commission hearing. The hearing shall be set and notice given as prescribed in Section 30.6 (Public Hearing Time and Notice). Within forty (40) days following the closing of a public hearing, the Board shall make a decision on the amendment.

Enforcement

SECTION 5.14: ENFORCEMENT

Section 5.14.A: Purpose & Scope

This section identifies what constitutes a violation of this Ordinance, establishes penalties and remedies, and authorizes enforcement procedures.

Section 5.14.B: Violation

Pursuant to A.R.S. § 11-815:

a. It shall be a violation of this Ordinance to erect, construct, reconstruct, alter or use a building or any other structure without first obtaining a building permit.

b. It shall be a violation of this Ordinance, and considered a public nuisance per se to make any Use of any Lot, parcel, or piece of property in such a way as to conflict with the provisions of this Ordinance.

c. Each day during which an illegal erection, construction, reconstruction, alteration, maintenance, or Use continues is a separate offense.

Section 5.14.C: Enforcement

1. Zoning Inspection and Investigation

   a. The Board of Supervisors, Director of Community Development, County Attorney, County Sheriff, Zoning Inspector, and all officers of Coconino County otherwise charged with the enforcement of the law are responsible for the enforcement of the provisions of this Ordinance

   b. Zoning Inspector

      1. The Zoning Inspector, also known as the Compliance Manager, shall administer and enforce this Ordinance. The Zoning Inspector shall:

      2. Receive and investigate allegations of violations of this Ordinance.

         i. Make necessary inspections to secure compliance with the provisions of this Ordinance.

         ii. Make investigations in connection with any matter referred to in this Ordinance and render written reports thereof when requested by the Board of Supervisors, or when the interests of Coconino County so require.

         iii. Issue such notices or orders as may be necessary for the purpose of enforcing compliance with the provisions of this Ordinance.

         iv. Keep careful and comprehensive records of all alleged violations of this Ordinance, including comprehensive notes as to the condition and existing Uses of the subject property, location, property owner and address, and specific section(s) of the Ordinance corresponding to the alleged violation. The Zoning Inspector shall further retain on

file, copies of all papers for such time as may be required by law.

c. Deputy Zoning Inspector

1. Deputy Zoning Inspectors, also identified as Code Enforcement Officers, shall be appointed by the Coconino County Board of Supervisors as needed to assist the Zoning Inspector. The Deputy Zoning Inspector shall:

i. Investigate and report on all allegations of zoning violations as assigned by the Zoning Inspector.

ii. Determine whether a condition or existing Use constitutes a violation of this Ordinance.

iii. When the Deputy Zoning Inspector confirms that a condition or existing Use constitutes a violation of this Ordinance, the Deputy Zoning Inspector may:

a. Serve notice of the violation to the Alleged Violator. The notice shall cite:

1. The nature of the violation,

2. The section of the Ordinance violated,

3. Information of possible penalties if violation is not ceased,

4. Steps necessary to bring the subject property into compliance with this Ordinance, and

5. A reasonable timeframe in which all necessary actions should be completed to correct the noticed violation.

b. Re-inspect the subject property upon the expiration of the reasonable timeframe provided in accordance with Section 16.3-1(B)(3)(a)(v).

c. Provide, for those violations not remedied within the timeframe provided in e of violation setting a final deadline for compliance.

1. The final deadline for compliance shall not exceed four (4) weeks.

2. Extend the final deadline for compliance, where the property owner demonstrates, with reasonable documentation, an effort to correct the existing violation(s)

d. Issue citations for violations of this Ordinance not corrected by the final deadline provided in accordance with Section 16.3-1(B)(c)(i). The citation shall include:

1. The nature of the violation.

2. The section(s) of this Ordinance which has/have been violated.

3. Possible penalties that can be assessed by the Hearing Officer.

e. Serve, together with the citation, a notice to appear before the

Hearing Officer, in accordance with A.R.S. § 11-815(E). The notice to appear shall:

1. Include the specific date and time at which the alleged violator must appear at the Zoning Violation Hearing.
2. Include information regarding the right to be represented by counsel or other designated representative and that failure to provide timely written notification of an election to be represented by counsel or other designated representative constitutes a waiver of that right.
3. If the Deputy Zoning Inspector is unable to personally serve the notice, the notice may be served by any form of mail requiring a signed and returned receipt, or in the same manner prescribed for alternative methods of service by the Arizona Rules of Civil Procedure, provided that a notice by means other than personal service must be affected at least thirty (30) days before the hearing.

f. Present evidence showing the existence of a violation, or testimony showing the existence of a violation when the County Attorney presents evidence on behalf of the Zoning Inspector, in accordance with A.R.S. § 11-815(F).

2. Hearings

a. Hearing Officer

The Hearing Officer is appointed by the Coconino County Board of Supervisors to hear and decide all civil proceedings established by this Ordinance.

b. The Hearing Officer shall:

1. Preside over Zoning Violation Hearings
2. Decide all objections as to the relevance of evidence or testimony presented during a Zoning Violation Hearing.
3. Determine responsibility for alleged zoning violations.
4. Impose civil penalties for zoning violations, pursuant to Section 16.3-2.B.2.a.ii or with Section 16.4(C)(1).
5. Include in all findings of responsibility, pursuant to Section 16.3-2(B)(2)(a)(ii) or Section 16.3-2(B)(7)(i), a non-compliance and daily penalty schedule to accrue should the violation(s) not be abated by the compliance date specified by the Hearing Officer.

c. The Hearing Officer may:

1. Continue Zoning Violation Hearings at the request of either party for good cause shown.
   i. The Hearing Officer shall not continue a hearing without first giving notice to both parties.
   ii. The Hearing Officer shall notify both parties in writing of the new

hearing date.

2. Question witnesses or representatives of either party during a Zoning Violation Hearing.

3. Attach a recurrence penalty to a parcel for a maximum of two (2) years from the hearing date. Said penalty shall be levied according to the recall procedure in Section 16.3-2(C) if a violation of the same section of this Ordinance, as addressed in the Hearing Officer's findings, occurs within the specified time period.

d. Zoning Violation Hearings

1. Every action or proceeding brought before the Hearing Officer for a violation of this Ordinance shall be commenced by the filing of a copy of the notice to appear, as provided by Section 16.3-1(B)(3)(e), and a copy of the citation, as provided by 16.3-1(B)(3)(d), with the Hearing Clerk.

2. The alleged violator shall, no later than 15 days after service of citation, submit an admission or denial of responsibility.

   i. When an alleged violator submits an admission of responsibility:

      a. The Hearing Officer shall waive the initial fee of $100.

      b. The Hearing Officer shall enter a finding of responsibility against the alleged violator providing 30 days to remedy the violation(s), unless extraordinary circumstances warrant an extension.

      c. The Hearing Officer shall vacate the Zoning Violation Hearing.

   ii. When an alleged violator submits a denial of responsibility:

      a. The Hearing Officer shall promptly notify the alleged violator of the right to be represented by counsel.

      b. The alleged violator must then notify the Hearing Officer in writing at least ten (10) days prior to the hearing date of his or her choice to be represented by counsel.

3. Failure to respond with either an admission or denial of responsibility is deemed admission by default.

4. If the alleged violator submits a denial of responsibility, the alleged violator, or his or her representative or attorney must appear at the Zoning Violation Hearing.

5. If the alleged violator, or his or her representative or attorney, fails to appear at the Zoning Violation Hearing, the violation(s) alleged in the citation shall be deemed admitted and the Hearing Officer shall enter a finding of responsibility against the alleged violator and impose a penalty pursuant to Section 16.4(B) of this Ordinance.

6. The County need not be represented by counsel at the Zoning Violation Hearing. Should the County elect to secure counsel, the County must, in writing, notify the Hearing Officer and the alleged violator at least fifteen (15) days prior to the hearing.

7. No later than ten (10) days prior to the hearing, both parties shall disclose a list of witnesses and prepared exhibits to the opposing party and shall place prepared exhibits on file with the Hearing Clerk.

   At the Hearing Officer's discretion, a failure to comply with Section 16.3-2(B)(6) may result in either the granting of a continuance to permit inspection, or the Hearing Officer shall deny the admission of the evidence.

8. The order of the Zoning Violation Hearing shall be as follows:
   i. The Hearing Officer shall call the case and briefly describe the procedures to be followed.
   ii. Opening Statement by the County
   iii. Opening Statement by Alleged Violator
   iv. Testimony of the County's Witnesses
   v. Testimony of Alleged Violator's Witnesses
   vi. Testimony of other attendees, at the discretion of the Hearing Officer
   vii. Closing Statement by the County
   viii. Closing Statement by the Alleged Violator
   ix. Upon conclusion of the Zoning Violation Hearing, or within ten (10) days thereof, a decision shall be made by the Hearing Officer. The decision of the Hearing Officer shall include the findings and judgment of the Hearing Officer.

9. The Zoning Violation Hearing shall be governed by the following:
   i. The Arizona Rules of Civil Procedure and Evidence shall not apply to a Zoning Violation Hearing. Any evidence offered may be admitted subject to a determination by the Hearing Officer that the offered evidence is relevant.
   ii. Audio recordings of the hearing shall be made and kept on record with the Hearing Officer for a period of one (1) year.
   iii. Either party may elect to utilize a court reporter during the Zoning Violation Hearing, at that own party's expense. Transcripts shall be obtained by each party directly from the court reporter and at the requesting party's expense.
   iv. If the Zoning Inspector or Deputy Zoning Inspector does not appear at the time set for the hearing, the Hearing Officer shall dismiss the citation without prejudice.
   v. The Hearing Officer may set aside a finding entered upon a failure to appear, pursuant to Section 16.3-2(B)(4), if it is determined by the Hearing Officer that the alleged violator was not served a citation, or for any other reason where necessary to prevent an injustice.

e. Recall Hearings

   1. Recall of a case may occur when the conditions and/or compliance time frame have not been met by the alleged violator. The citation and Zoning

Violation Hearing are considered to be open until complete compliance has been reached as outlined in the Hearing Officer's decision.

2. Notice of a recall hearing shall be made according to Section 16.3-1(B) (3) (e).

3. Recall hearings to determine whether a violation has recurred shall be conducted according to Section 16.3-2(B).

3. Appeals

a. Appeals to the Board of Supervisors

The Alleged Violator or the County may appeal to the Board of Supervisors the final decision of the Hearing Officer. A written notice of appeal shall be filed with the Hearing Officer within seven (7) days after the hearing officer's finding.

i. The notice of appeal shall identify the finding appealed from. It shall be signed by the appellant or the appellant's counsel, and shall contain the names, addresses, and telephone numbers of all parties and their attorneys. When a party appeals, the Hearing Clerk shall send a copy of the notice of appeal to the other party or the other party's attorney.

ii. Appeals shall be limited to the record of the proceeding before the Hearing Officer, and no new evidence may be introduced. The record of the proceedings shall include all materials in the Hearing Officer's file, all evidence admitted at the hearing, and the official record as per Section 16.3-2(B)(8)(b) of this Ordinance.

iii. Upon receiving the notice of appeal, the Hearing Clerk shall, within thirty (30) days prepare and transmit the record and provide notice of the transmittal to the parties.

iv. The parties may stipulate that the appeal may be heard on less than a complete record or upon stipulated facts. The designation of the stipulated record shall be in writing, filed with the Hearing Officer within fifteen (15) days after the notice of appeal.

v. Upon sending the record to the Board of Supervisors, the Hearing Officer shall notify both parties that they have five (5) days from the date of the letter to submit memoranda stating their positions to be submitted to the Clerk of the Board of Supervisors. The memoranda shall not exceed five (5) pages in length.

vi. Public notice of the appeal before the Board of Supervisors shall be posted at least twenty-four (24) hours prior to the hearing. The Hearing Officer shall mail a notice of the hearing to both parties not less than ten (10) business days prior to the hearing.

vii. The Chairperson of the Board of Supervisors shall preside at the appeal and shall decide on all questions pertaining to procedure.

viii. At the hearing before the Board of Supervisors, arguments by the parties shall be limited to five (5) minutes for each party unless extended by the Chairperson of the Board of Supervisors.

ix. After consideration of the parties' arguments, the record, and any submitted memoranda, the Board of Supervisors shall make a determination as to whether the Hearing Officer abused his or her discretion by a motion and majority vote of the quorum.

x. If the Board of Supervisors finds that the Hearing Officer abused his or her discretion, the Board of Supervisors may:

a. Increase, decrease, or modify any sanction imposed by Hearing Officer; and

b. Affirm the decision of the Hearing Officer; or

c. Affirm in part and reverse in part and remand for further proceedings; or

d. Reverse the decision of the Hearing Officer and remand for further proceedings; or

e. Vacate the decision of the Hearing Officer.

b. Appeals to Superior Court

Decisions by the Board of Supervisors may be appealed to the Coconino County Superior Court pursuant to A.R.S. § 12-910.

4. Penalties & Remedies

a. Pursuant to A.R.S. § 11-815:

1. The County may withhold all Building Permits and Zoning permits for properties on which a Use of the property, Building, or any other Structure exists which does not meet the standards of this Ordinance.

2. If a zoning violation is found to exist pursuant to Section 16.3-2(B)(2)(a)(ii)or Section 16.3-2(B)(7)(i), the Hearing Officer shall impose a civil sanction not to exceed the maximum fine established in Section 16.4.C for each violation, for each day the violation continues.

3. Violations of this Ordinance shall be punished by:

i. Civil penalties, per day, per violation, of up to:

a. Seven hundred fifty dollars ($750.00) for an individual, pursuant to A.R.S. § 13- 802(B); or

b. Ten thousand dollars ($10,000) for any enterprise, corporation, association, labor union, or other legal entity, pursuant to A.R.S. § 13-803(A)(3).

c. Four (4) months imprisonment, pursuant to A.R.S. § 13-707(A)(2), in extreme circumstances.

ii. Should the daily penalty balance for violation(s) on a single Lot or parcel exceed $1,500.00 for agricultural and residential Uses or $3,000.00 for commercial and industrial Uses, the matter shall be forwarded to the County Attorney's Office for further legal action.

iii. Civil penalties assessed by the Hearing Officer shall not relieve the alleged violator from responsibility for correcting any violation(s).

iv. Payment of penalties shall be made to the Community Development Department.

CHAPTER 6. DEFINITIONS

SECTION 6.1: Purpose and Scope

1. For the purposes of this Ordinance, certain words, phrases, and terms used herein shall have the meaning assigned to them by this Section. ~~Definitions applicable only to specific sections of this Ordinance are located at the beginning of the following sections: the Floodplain Management Overlay Zone in Section 22.6; Wireless Telecommunication Facilities in Section 24.5; Accessory Wind Energy Systems in Section 24.8; Medical Marijuana Dispensaries and Off-Site Cultivation and Infusion Facilities in Section 24.9; Signs in Section 26; Lighting in Section 27; Landscaping in Section 28; and Nonconforming Situations in Section 29 of this Ordinance.~~
2. **Unless specifically defined below, words or phrases used in this Ordinance shall be interpreted so as to give them the meaning they have in common usage and to give this Ordinance it's most reasonable application**
3. When not inconsistent with the context, words used in the present tense include the future; words in the singular number include the plural; and those in the plural number include the singular. The word "shall" is mandatory; the word "may" is permissive.
4. Any dispute regarding the meaning of any word, phrase or section of this Ordinance shall be decided by the Community Development Director. Appeals of the decision of the Community Development Director shall be heard by the Board of Adjustment as described in Section 30.8 and A.R.S. § 11-816.
5. The Planning & Zoning Commission shall make determinations to Uses not listed as described in Section 30.

SECTION 6.2: Definitions

ABANDONMENT means the discontinuation of use for a period of one hundred and eighty (180) days.

ABANDONMENT (lighting) means the discontinuation of use for a period of six months.

ABUT shall mean to touch or adjoin along a common border or property line.

ACCESS or ACCESS WAY shall be the means of ingress and egress connecting a Site to the public roadway system.

ACCESSORY DWELLING shall mean a second Dwelling in single Family residential zones.

ACCESSORY ~~LIVING QUARTERS~~ **DWELLING**, **ATTACHED** shall mean **an Accessory Dwelling** ~~portion of a~~ Single Family ~~Dwelling~~ that is attached to the ~~main~~ **principal** Dwelling ~~and is an Accessory Use by members of the Family occupying the property.~~ An identifying characteristic of an ~~Accessory Living Quarters~~ **Attached Accessory Dwelling** ~~is~~ **connection to** ~~attachment to~~ the main Dwelling **either internally or by a**

common wall. ~~by heated living space. Accessory Living Quarters may not be separated from the main Dwelling bu patios, Garages, Carports, breezeways or similar separations~~

ACCESSORY DWELLING, DETACHED ~~GUEST HOUSE~~ shall mean a ~~detached habitable Structure. used by members of the Family occupying the main Dwelling and their non-paying guests~~ **an Accessory Dwelling which is not connected neither internally nor by a common wall to the principal Dwelling. Any Accessory Dwellings not meeting the definition of Attached Accessory Dwelling shall be considered Detached**~~.~~

ACCESSORY STRUCTURE shall mean a Building, part of a Building, or Structure, which is for Accessory Use. **Swimming pools, hot tubs and Spas shall be considered detached Accessory Structures.**

ACCESSORY STRUCTURE, FLOODPLAIN means a Structure that is solely for the parking of no more than 2 cars; or limited storage and does not exceed 480 square feet in size.

ACCESSORY USE shall mean a Use incidental, related, appropriate and clearly subordinate to the main Use of the Lot or Building, which Accessory Use does not alter the principal Use of such Lot or Building.

ACCESSORY USE, FLOODPLAIN means a Use which is incidental and subordinate to the Principal Use of the parcel of land on which it is located.

ACCESSORY WIND ENERGY SYSTEM A system designed as a secondary use to existing Buildings or facilities, wherein the power generated is used primarily for on-site consumption. The system consists of a wind turbine and associated controls and may include a Tower.

~~ACCESSORY WIND ENERGY SYSTEMS DEFINITIONS - See Section 24.8~~

ADMINISTRATIVE PERMIT shall mean a permit which is issued by the Staff of Community Development without requiring a hearing or other body to approve the permit.

ADVERTISING DEVICE shall mean any figure, symbol, design, model, or device, whether it contains a lettered advertising message or not, used to attract attention or convey a message and which is visible from any area outside a Building. Advertising Devices can include, but are not limited to: vehicles, vehicle parts, wagons, trailers, railroad cars, shipping containers, water storage tanks and goods for sale.

AGRICULTURE, EXEMPT shall mean use of property exempt from zoning under A.R.S. §11-812.

AGRICULTURE, NON-EXEMPT shall mean the tilling of the soil together with the raising of crops, horticulture, viticulture, silviculture, small livestock farming, dairying and/or pasture and range Livestock production, including all uses customarily incidental, thereto but not including slaughter houses, fertilizer yards, or plants for the reduction of animal matter or any other industrial Use which is similarly objectionable because of noise, odor, smoke, dust or fumes. Agriculture does not include the concentrated single-use operation of Feed Lots, hog, turkey, chicken, fur-bearing animals or other similar farms, unless these operations are operated in conjunction with or are a part of the crop

production of the same or adjoining parcels under common ownership. Agriculture does not include Exempt Agriculture.

AGRICULTURAL COMPOSTING, EXEMPT shall mean the controlled biological decomposition of organic solid waste under in-vessel anaerobic or aerobic conditions where all or part of the materials are generated on the farmland or will be used on the farmland associated with the Agricultural Composing operation. The Agricultural Composting Use is exempt from zoning if it meets the requirements of A.R.S. §11-812.

AGRICULTURAL FACILITY shall mean an open field or enclosed building with transparent walls or roof whether publicly or privately owned including, but not limited to, greenhouses used for the production of horticultural products, and the pasturing of animals.

AGRITOURISM shall mean a commercial enterprise at a working farm, ranch or agricultural plant conducted for the enjoyment or education of visitors. The tourism enterprises are supplemental to the agricultural use. Agritourism can include, but is not limited to, shops, farm stays, tours, on-farm classes, seasonal festivals, pumpkin patches, Christmas tree farms, wineries, orchard dinners, barn dances, and guest ranches.

AIRPORT shall mean any area which is used for the taking off and landing of aircraft, including helicopters, and appurtenant areas which are used for airport Building or facilities, including open spaces, taxiways and tie-down areas.

ALLEGED VIOLATOR shall mean a person, natural or corporate, responsible for a property upon which the Zoning Inspector or Code Enforcement Officer has reason to believe a violation of the Zoning Ordinance exists, including, but not limited to, the owner or tenant for the subject property.

ALLEY shall mean any dedicated way, intended for vehicular service to the rear or side of property served by a Street. An Alley is not intended for general traffic circulation.

ANEMOMETER shall mean an instrument for measuring wind force. See also Meteorological (Met) Tower.

ALLUVIAL FAN FLOODING means Flooding occurring on the surface of an alluvial fan or similar landform which originates at the apex and is characterized by high-velocity flows; active processes of erosion, sediment transport, and deposition; and, unpredictable flow paths.

ANIMAL HOSPITAL shall mean a place where animals are given medical or surgical treatment and are cared for during the time of such treatment. Use as a Kennel shall be limited to short-time boarding and shall be only an Accessory Use.

ANIMAL HUSBANDRY shall mean the branch of Agriculture concerned with breeding and rearing of farm animals conducted primarily for educational purposes or school credits.

ANTENNA means any exterior device for transmitting and receiving wireless communication that is mounted on a Tower, Building or Structure and that is used to send and receive signals for cellular telephone, personal communication service (PCS), mobile radio,

paging, wireless Internet access, and similar communication services. Antennas may include panels, microwave dishes, satellite dishes, whip antennas or other devices that may be affixed to a Tower, pole or other Structure.

ANTENNA, ATTACHED means an Antenna mounted on the exterior of an existing Building, silo, smokestack, water tower, utility or power pole, existing wireless communication Tower, or an alternative support Structure.

ANTENNA, CONCEALED (STEALTH) means an Antenna with a support Structure that screens or camouflages the presence of Antennas and/or Towers from public view in a manner appropriate to the site's context and surrounding environment. Examples include man-made trees, flagpoles that do not exceed ten feet above the maximum allowable Structure Height for the zone, utility poles, light poles, water tanks, steeples, and architectural and facade features. APARTMENT: See DWELLING, MULTIPLE.

AREA PLAN shall mean an official amendment to the Coconino County Comprehensive Plan that reflects the local residents' vision of the future, contains goals and policies for development, and provides guidance for decision makers. An Area Plan may serve a community, specific neighborhoods or rural areas.

AUTO LUBRICATION and OIL-CHANGE OPERATION shall mean any Building or premises used primarily for the purpose of lubrication, fluid replenishment and oil changing. Such servicing shall not entail the overnight storage of vehicles, nor shall such services include tire recapping, wheel repair, sale or rebuilding of engines, battery manufacturing or rebuilding, radiator repair, transmission repair, engine steam cleaning, autobody work, welding, reupholstering or installation of auto glass.

AUTOMOBILE-SERVICE STATION shall mean any premises used for the retail sales of vehicular fuels and for servicing and light maintenance activities such as engine tuneups, lubrication, sale and service of tires and batteries, and minor repairs. Service Stations shall not include premises where heavy automobile maintenance activities such as engine overhauls, painting, body repair, and transmission repair are conducted. Service Stations shall entail only incidental overnight parking of vehicles.

AUTOMOBILE-WRECKING YARD shall mean the area outside of an enclosed Building used for the dismantling or wrecking of motor vehicles or trailers: or the storage, sale, or dumping of dismantled, partially dismantled, obsolete, or wrecked vehicles or their parts. An Automobile-Wrecking Yard does not include the incidental storage of vehicles in connection with the operation of an Automotive Repair Garage, providing the repair period for any one vehicle does not exceed 30 days.

AUTOMOTIVE REPAIR GARAGE shall mean an establishment engaged in furnishing automotive and light-truck repair and servicing to the general public. These facilities shall not include tire recapping or battery manufacturing or rebuilding.

BACKFILL means the placement of fill material within a specified depression, hole or excavation pit below the surrounding adjacent ground level as a means of improving Flood water conveyance or to restore the land to the natural contours existing prior to excavation.

BAR shall mean premises used primarily for the sale or dispensing of alcohol for on-site consumption and where food may be available for consumption on the premises as an

accessory to the principal use.

BASEMENT any area of a building having its floor subgrade (below ground level) on all sides. A Basement shall be counted as a Story for purpose of height measurement where more than one-half (½) of its height is above Grade.

~~BASEMENT, FLOODPLAIN means any area of the Building having its floor subgrade (below ground level) on all sides.~~

BED-AND-BREAKFAST ESTABLISHMENT shall mean a portion of a Single Family Dwelling in which one or two bedrooms are completely furnished guest rooms occupied, or intended to be occupied, or advertised as available on a nightly basis for compensation. See Section 24.3.

BEDROOM shall mean a room meeting the provisions of the building code and environmental quality as determined by the Building Official.

BILLBOARD shall mean any Off Premise Sign that directs attention to or advertises a business, commodity, service, person, enterprise, proposition, or entertainment**.**

~~BILLBOARD (Signs) shall mean any Sign designated for use with changing advertising copy and which is normally used for the advertisement of goods produced or services rendered at locations other than the premises on which the Sign is located.~~

BOARD or BOARD OF SUPERVISORS shall mean the Board of Supervisors of Coconino County, Arizona.

BOARD OF ADJUSTMENT shall mean the Board of Adjustment of Coconino County, Arizona.

BORROW PIT shall mean any place or premises where dirt, soil, sand, gravel or other earthy material is removed by excavation for any purpose other than that necessary and incidental to grading or to Building construction or operation on the premises.

BREAKAWAY WALL means a wall that is not part of the structural support of the Building and is intended through its design and construction to collapse under specific lateral loading forces, without causing damage to the elevated portion of the Building supporting foundation system.

BUILDING shall mean a Structure having a roof supported by columns or walls.

BUILDING PERMIT shall mean a permit required for any owner or authorized agent who intends to construct, enlarge, alter, repair, move, demolish, or change the occupancy of a Building or Structure, or to erect, install, enlarge, alter, repair, remove, convert, or replace any electrical, gas, mechanical, or plumbing system, the installation of which is regulated by this code, or cause such work to be done in the unincorporated areas of Coconino County, pursuant to building codes adopted by the Board of Supervisors.

CABANA shall mean any Building or Structure erected, constructed or placed with a Building Permit on a Mobile or Manufactured Home space and used in conjunction with a Mobile or Manufactured Home.

CALIPER shall mean the diameter of a tree trunk measured four and one-half (4 ½) feet above

the ground. Also known as Diameter at Breast Height (DBH)

CAMPGROUND shall mean a plot of ground, with or without sanitation facilities or water, for overnight or limited camping. May include the overnight parking of Recreational Vehicles.

CANOPY shall mean a roof-like Structure supported by a permanent foundation and open on all four sides.

CARPORT shall mean a permanent roofed Structure or a portion of a main Structure with not more than two (2) enclosed sides used or intended to be used for automobile storage for the occupants of the premises.

CEMETERY shall mean land used for the burial of the dead, and dedicated for such purposes, including columbariums, crematoriums, mausoleums and mortuaries when operated in conjunction with and within the boundaries of such premises.

CHURCH shall mean Buildings and locations where people regularly participate in or hold religious services, meetings or other activities related to the exercise of their religious beliefs not including schools, preschools or residential Uses. This definition does not include small home group religious meetings occurring in a Dwelling.

CHURCH ACCESSORY USES shall mean Uses that are Accessory Uses to the Principal Use of a Church including schools, Preschools and residential Uses.

CLUB shall mean an association of persons (whether or not incorporated) for a common purpose including entities qualified under Section 501(c)(3) of the Internal Revenue Code, but not including groups organized solely or primarily to provide a product or to render a service or that provides products or services that are contrary to the public policy of this State or the United States.

CODE ENFORCEMENT OFFICER shall mean a deputy zoning inspector, appointed by the Board of Supervisors pursuant to A.R.S. 11-815(A) responsible for assisting the Zoning Inspector with the enforcement of the Zoning Ordinance and to investigate possible violations thereof.

CO-LOCATION means use by two or more wireless communication providers on the same Tower or other alternative Structure.

COMMERCIAL shall mean activity involving the sale of goods or services carried out for profit.

COMMERCIAL ACRE shall mean a unit of land area that is only 82.6 percent of an acre. It measures 36,000 square feet, 4,000 square yards, 3,342.8 square meters, or 0.334 hectare.

COMMERCIAL EQUIPMENT shall mean any motorized or non-motorized piece of machinery designed for construction, demolition, excavation, logging, shipping, Warehousing, freight-hauling, etc., including but not limited to backhoes, bulldozers, dump trucks, equipment trailers, fork lifts, drill rigs, front-end loaders, or other similar Commercial Equipment.

COMMERCIAL FERTILIZER OPERATIONS shall mean a place where any substance that

contains one or more recognized plant nutrients, that is used for its plant nutrient content and is designed for use or claimed to have a value in promoting plant growth, except unmanipulated animal and vegetable manures, and other projects exempted by rule of the Arizona Department of Agriculture is collected, processed or stored on a commercial basis. A Commercial-Fertilizer Operation must be licensed by the State of Arizona or meet an exemption from licensing requirements per A.R.S. § 3-262.

COMMERCIAL VEHICLE shall mean any bus, truck or truck tractor or other vehicle having a gross vehicle weight of 26,000 pounds or more; or trailer, or semi-trailer, dump truck, aggregate hauling trailer, logging trailer, etc., not including water hauling apparatus for purposes of transporting water for personal use.

COMMISSION shall mean the Coconino County Planning and Zoning Commission.

COMMUNICATION TOWER shall mean a freestanding Structure including appurtenances (greater than 34 feet in height) used for the following commercial communication purposes:

6. AM & FM radio
7. Two-way radio
8. Common carriers
9. Wireless communication
10. Microwave

Amateur (HAM) towers for the personal use of the property owner are excepted from this definition unless in excess of 100 feet in height.

COMMUNITY CENTER shall mean a meeting place used by members of a community for social, cultural, or recreational purposes.

COMMUNITY DEVELOPMENT DIRECTOR means the Director of Community Development for Coconino County, **their designee or appointee.**

COMMUNITY GARDEN shall mean a piece of land cultivated by more than four Families living on Lots which are different from the location of the community garden. The use by four Families or less shall be considered Gardening.

COMMUNITY COOP shall mean the keeping of Poultry or other animals on a Lot which is different from the Lot on which the owner(s) of the animals resides or the keeping of animals owned by a cooperative.

COMMUNITY-SERVICE AGENCY shall mean an organization such as YMCA, YWCA, Boy Scouts, Girl Scouts, Campfire, and any organization established as a nonprofit corporation qualified under 501(c)(3) of the Internal Revenue Code or an organization supported in whole or in part by public subscription and primarily established to serve the social or welfare needs of the community or any part thereof, and that is not organized for the purpose of personal profit or to earn income for ~~of~~ any individual, group of individuals, or corporation and that is not contrary to the public policy of this State or the United States.

COMPREHENSIVE PLAN shall mean the Coconino County Comprehensive Plan and all special

Area Plans adopted as amendments to the Comprehensive Plan. A statement of a community's future, intended to serve as the primary decision-making guide for growth and development in the County.

CONDITIONAL USE shall mean a land Use that because of its inherent nature, extent and external effects, require special care in the control of its location, design, and methods of operation to ensure that its location is appropriate and the public health, safety and general welfare is protected. Such Uses are ~~designated as Conditional Uses~~ allowed only pursuant to **issuance of** a Conditional Use permit. See Administration Section 30.4.

CONDOMINIUM shall mean an estate in real property consisting of an undivided interest in common in a portion of a parcel of real property together with a separate interest in space in a residential complex located on such real property. A Condominium may include, in addition, a separate interest in other portions of such real property.

CONDOMINIUM CONVERSION shall mean the development of land and existing Structures as a Condominium, regardless of the present or prior Use of such land or Structure, and regardless of whether substantial improvements have been made to such Structures.

CONIFER shall mean a plant that produces cones such as a plant belonging to the family Coniferae, such as Pines, Cypresses, Junipers and Cedars.

CONTRACTOR'S YARD shall mean the Use of any Lot or parcel of land for the commercial or non-commercial parking, storage, maintenance of Commercial Vehicles; and/or more than one piece of Commercial Equipment; and/or outdoor storage of Building materials, aggregates, lumber, piping, vehicle parts, tires, etc.

CONVALESCENT HOME shall mean a facility appropriately licensed by the State, or Coconino County, which provides bed and ambulatory care for patient during post-operative convalescence, chronic illness or dietary problems, and aged or infirm persons unable to care for themselves.

CONVENIENCE MARKET shall mean a retail store that is intended to attract stop-and-go traffic, with or without fuel sales, and sell primarily food, beverages and other household supplies to customers who purchase only a few items.

COTTAGE INDUSTRY shall mean any business or commercial Use conducted within a Dwelling or an Accessory Structure and carried on by the inhabitants thereof, which Use is clearly incidental and secondary to the Use of the Structure for Dwelling purposes and which use does not change the character thereof or does not adversely effect the Uses permitted in the Zone of which it is a part. See Section 24.3 for specific requirements.

COUNTY shall mean the County of Coconino, State of Arizona.

COUNTY RECORDER shall mean the County Recorder of the County of Coconino.

DAY-CARE CENTER shall mean any child care arrangement that provides care and/or supervision for six (6) or fewer children for compensation.

DECIDUOUS shall mean a plant that loses its leaves annually at the end of the growing season

DEFENSIBLE SPACE shall mean that area between a Structure and a potential oncoming

wildfire where the vegetation has been modified to reduce the wildfire threat and which provides an opportunity to effectively defend the Structure. This is also known as Survivable Space.

DENSITY shall mean the total number of Dwelling Units permitted on an acre of land exclusive of all streets and Rights-Of-Way that restrict the surface use of the property in question.

DEVELOPMENT PROJECT means any residential, commercial, industrial or mixed use Subdivision plan or development plan which is submitted to the County for approval.

DIRECTIONAL SIGN shall mean a sign which conveys instructions for pedestrians and/or motorists such as entrance and exits of a parking lots, walking directions, or directions to particular sites (i.e. a park, library, etc.).

DIRECTOR shall mean the Director of Community Development of Coconino County, their designee or appointee.

DORMITORY shall mean a Building used primarily for sleeping accommodations, where such Building is related to an educational or religious institution or for employee housing associated with a commercial enterprise. For purposes of calculating Density, three dorm rooms shall be equivalent to one Dwelling Unit.

DRIP LINE shall mean an area around the tree trunk that generally includes the spread of the tree branches. It also may refer to that area around a Structure that is beneath the roof overhang.

DRIVE-IN THEATER shall mean an outdoor Structure designed for theatrical performances, displays or shows where the performance is viewed by all or part of the audience from a vehicle.

DROUGHT TOLERANT shall mean non-native species that can survive extended periods of time with little or no water, and that are appropriate for a particular Site without posing a threat of invasiveness or possessing characteristics of Invasive Species or Noxious Weeds.

DWELLING shall mean one or more habitable rooms for residential Use that are used as a home, residence, or sleeping place by one or more persons and which ~~may~~ contain sleeping, sanitary and cooking facilities. Dwelling includes an Apartment or Condominium, Manufactured Home, Modular Home, Mobile Home, Guest House ~~or~~ Dormitory or other structure meeting the provisions of the Building Division.

DWELLING, MULTIPLE shall mean a Building containing two (2) or more Dwelling Units or a combination of two (2) or more separate, Single-Family Dwelling units on one Lot or Building Site.

DWELLING, SINGLE FAMILY shall mean a detached Dwelling Unit used by one family.

DWELLING UNIT shall mean one or more rooms and a single kitchen or cooking accommoda-

tion and a bathroom for living and sleeping purposes.

EASEMENT shall mean a right-of-use over the property of another.

EDUCATIONAL INSTITUTIONS shall mean public and other non-profit institutions conducting regular academic instruction at Pre-school, kindergarten, elementary, secondary, collegiate levels, and including graduate schools, universities, non-profit research institutions and religious institutions. Such institutions must either (1) offer general academic instructions, or (2) confer degrees as a college or university of undergraduate or graduate standing, or (3) conduct research, or (4) give religious instruction. This definition does not include commercial or trade schools.

ELECTRIC GENERATING STATION shall mean an electrical generating facility including traditional and renewable-energy power plants.

ENVIRONMENTALLY SENSITIVE FEATURES shall mean Environmentally Sensitive Features are elements in the landscape that play a particularly large role in supporting wildlife and plant diversity, and are at the same time especially sensitive to degradation. These are determined by best available science and include floodplains, springs, stream corridors, wetlands, threatened and endangered species habitat, old growth or rare vegetation, steep slopes.

EROSION means the process of the gradual wearing away of land masses. This peril is not per se covered under the program. (See FLOOD-RELATED EROSION.)

EVERGREEN shall mean a plant that retains its needles or leaves all year long, although losing some of the older leaves regularly throughout the year.

EXISTING MANUFACTURED HOME PARK or SUBDIVISION means a Manufactured Home Park or Subdivision for which the construction of facilities for servicing the Lots on which the Manufactured Homes are to be affixed (including, at a minimum, the installation of utilities, the construction of Streets, and either final site grading or the pouring of concrete slabs) is completed before the effective date of the Floodplain management regulations adopted by the Community

EXOTIC ANIMALS shall mean animals that are not native to North America that are not included within the definition of Livestock.

FAMILY shall mean any number of individuals related by blood, marriage, affinity or legal adoption/guardianship, or a group of not more than five (5) unrelated persons living together as a single housekeeping unit in a single Dwelling unit sharing common cooking facilities.

FARMERS MARKET shall mean an occasional or periodic market held in an open pre-designated area where groups of individual sellers offer their own home-grown and/or hand-made items such as fresh produce, seasonal fruits, fresh flowers, arts and crafts items, and food and beverages dispensed from booths located on-site for sale to the public. Does not to include second-hand goods.

FARM STAND shall be a building or structure, weather permanent or temporary,

used for the retail sales of fresh fruits, vegetables, flowers, herbs, or plants that are produced on-site. May also involve the accessory sales of other unprocessed foodstuffs, home processed food products such as jams, jellies, pickles, sauces, or baked goods; but not including any commercially processed or packaged foodstuffs.

FEEDLOT, COMMERCIAL shall mean a feeding operation on a Parcel of land where Livestock are temporarily kept or exchanged in corrals or yards on a sustained basis and where feed is brought to the yard.

FINANCIAL ASSISTANCE means any form of loan, grant, guaranty, insurance, payment, rebate, subsidy, disaster assistance loan or grant, or any other form of direct or indirect federal assistance, other than general or special revenue sharing or formula grants made to States.

FLOODPLAIN MANAGEMENT DEFINITIONS - See Section 23.1

APEX means a point on an alluvial fan or similar landform below which the flow path of the major stream that formed the fan becomes unpredictable and Alluvial Fan Flooding can occur.

APPEAL, FLOODPLAIN means a request for a review of the Floodplain Administrator's interpretation of any provision of this Ordinance or a request for a Variance.

AREA OF SHALLOW FLOODING means a designated AO, AH, or VO Zone on the Flood Insurance Rate Map (FIRM) with a one percent or greater annual chance of Flooding to an average depth of one to three feet where a clearly defined channel does not exist, where the path of Flooding is unpredictable and where velocity flow may be evident. Such Flooding is characterized by ponding or sheet flow.

BASE FLOOD shall mean the flood having a one-percent chance of being equaled or exceeded in any given year.

BASE FLOOD ELEVATION means the elevation shown on the Flood Insurance Rate Map for Zones AE, AH, A1-30, VE and V1-V30 that indicates the water surface elevation resulting from a flood that has a 1-percent or greater chance of being equaled or exceeded in any given yea

CRITICAL FEATURE means an integral and readily identifiable part of a Flood Protection System without which the Flood protection provided by the entire system would be compromised

COMMUNITY, FLOODPLAIN means any state or area or political subdivision thereof, or any Indian tribe or authorized tribal organization, or authorized native organization which has authority to adopt and enforce Floodplain management regulations for the area within its jurisdiction.

DEVELOPMENT, (FLOODPLAIN) means any human-made change to improved or unimproved real estate, including but not limited to Buildings or other Structures, mining, dredging, filling, grading, paving, excavation or drilling operations, and storage

of materials and equipment located within the Special Flood Hazard Area

ENCROACHMENT, FLOODPLAIN means the advance or infringement of Uses, plant growth, fill, excavation, Buildings, permanent Structures or development into a Floodplain which may impede or alter the flow capacity of a Floodplain.

FLOOD or FLOODING means a general and temporary condition of partial or complete inundation of normally dry land areas from (1) the overflow of Flood waters, (2) the unusual and rapid accumulation or runoff of surface waters from any source, and/or (3) the collapse or subsidence of land along the shore of a lake or other body of water as a result of Erosion or undermining caused by waves or currents of water exceeding anticipated cyclical levels or suddenly caused by an unusually high water level in a natural body of water, accompanied by a severe storm, or by an unanticipated force of nature, such as flash Flood or an abnormal tidal surge, or by some similarly unusual and unforeseeable event which results in Flooding as defined in this definition.

FLOOD INSURANCE RATE MAP (FIRM) means the official map on which the Federal Emergency Management Agency or Federal Insurance Administration has delineated both the Special Flood Hazard Areas and the risk premium zones applicable to the Community.

FLOOD INSURANCE STUDY means the official report provided by the Federal Insurance Administration that includes Flood profiles, the FIRM, the Flood Boundary and Floodway Map, and the water surface elevation of the base Flood.

FLOODPLAIN or FLOOD-PRONE AREA means any land area susceptible to being inundated by water from any source (see definition of “Flood”).

FLOODPLAIN ADMINISTRATOR means the Director of Community Development who is hereby authorized by the Floodplain Board to administer and enforce the provisions of this Ordinance.

FLOODPLAIN BOARD means the Board of Directors of the Flood Control District of Coconino County at such times as they are engaged in the enforcement of this Ordinance.

FLOODPLAIN MANAGEMENT means the operation of an overall program of corrective and preventive measures for reducing Flood damage and preserving and enhancing, where possible, natural resources in Floodplains, including but not limited to emergency preparedness plans, Flood control works and Floodplain Management Regulations.

FLOOD PLAIN MANAGEMENT REGULATIONS means this Ordinance and other Zoning ordinances, Subdivision regulations, Building codes, health regulations, special purpose ordinances (such as Floodplain ordinance, grading ordinance and Erosion control ordinance) and other applications or police power which control development in Flood-prone areas. This term describes federal, state or local regulations in any combination thereof, which provide standards for preventing and reducing Flood loss and damage.

FLOOD PROTECTION SYSTEM means those physical structural works for which funds

have been authorized, appropriated, and expended and which have been constructed specifically to modify Flooding in order to reduce the extent of the area within a community subject to "Special Flood Hazard" and the extent of the depths of associated Flooding. Such a system typically includes dams, reservoirs, levees or dikes. These specialized Flood modifying works are those constructed in conformance with sound engineering standards.

FLOOD PROOFING means any combination of structural and non-structural additions, changes, or adjustments to Structures which reduce or eliminate Flood damage to real estate or improved real property, water and sanitary facilities, Structures and their contents.

FLOOD-RELATED EROSION means the collapse or subsidence of land along the shore of a lake or other body of water as a result of undermining caused by waves or currents of water exceeding anticipated cyclical levels or suddenly caused by an unusually high water level in a natural body of water, accompanied by a severe storm, or by an unanticipated force of nature, such as flash flood or an abnormal tidal surge, or by some similarly unusual and unforeseeable event which results in Flooding.

FLOOD-RELATED EROSION AREA MANAGEMENT means the operation of an overall program of corrective and preventive measures for reducing Flood-related Erosion damage, including, but not limited to, emergency preparedness plans, Flood-related Erosion control works, and Floodplain Management Regulations.

FLOODWAY means the channel of a river or other Watercourse and the adjacent land areas that must be reserved in order to discharge the Base Flood without cumulatively increasing the water surface elevation more than a designated height. Also referred to as "Regulatory Floodway"

FLOODWAY FRINGE is that area of the Floodplain on either side of the "Regulatory Floodway" where encroachment may be permitted.

FREEBOARD means a factor of safety usually expressed in feet above a Flood level for purposes of Floodplain Management. "Freeboard" tends to compensate for the many unknown factors that could contribute to Flood heights greater than the height calculated for a selected size Flood and Floodway conditions, such as wave action, bridge openings, and the hydrological effect of urbanization of the watershed.

LEVEE means a human-made Structure, usually an earthen embankment, designed and constructed in accordance with sound engineering practices to contain, control, or divert the flow of water so as to provide protection from temporary Flooding.

LEVEE SYSTEM means a Flood Protection System which consists of a Levee, or Levees, and associated Structures, such as closure and drainage devices, which are constructed and operated in accordance with sound engineering practices.

MANUFACTURED HOME, FLOODPLAIN means a Structure, transportable in one or more sections, which is built on a permanent chassis and is designed for use with or without a permanent foundation when connected to the required utilities. The term

“Manufactured Home” does not include a “Recreational Vehicle”.

MANUFACTURED HOME PARK OR SUBDIVISION, FLOODPLAIN means a parcel (or contiguous parcels) of land divided into two or more Manufactured Home Lots for sale or rent.

MUDSLIDE (i.e., mudflow) describes a condition where there is a river, flow or inundation of liquid mud down a hillside usually as a result of a dual condition of loss of brush cover, and the subsequent accumulation of water on the ground preceded by a period of unusually heavy or sustained rain. A Mudslide (i.e., mudflow) may occur as a distinct phenomenon while a landslide is in progress, and will be recognized as such by the Administrator only if the mudflow, and not the landslide, is the proximate cause of damage that occurs.

MUDSLIDE (i.e., MUDFLOW) AREA MANAGEMENT means the operation of an overall program of corrective and preventive measures for reducing Mudslide (i.e., mudflow) damage, including, but not limited to, emergency preparedness plans, mudslide control works, and Floodplain Management Regulations.

MUDSLIDE (i.e., MUDFLOW) PRONE AREA means an area with land surfaces and slopes of unconsolidated material where the history, geology and climate indicate a potential for mudflow.

NEW CONSTRUCTION, FlOODPLAIN means, for the purposes of determining insurance rates, Structures for which the “start of construction” commenced on or after the effective date of an initial FIRM or after December 31, 1974, whichever is later, and includes any subsequent improvements to such Structures. For Floodplain Management purposes, “New Construction” means Structures for which the “start of construction” commenced on or after the effective date of a Floodplain Management Regulation adopted by the Flood Control District and includes any subsequent improvements to such Structures.

OBSTRUCTION, FlOODPLAIN includes, but is not limited to, any dam, wall, wharf, embankment, levee, dike, pile, abutment, protection, excavation, channelization, bridge, conduit, culvert, Building, wire, fence, rock, gravel, refuse, fill, Structure, vegetation, or other material in, along, across, or projecting into any Watercourse which may alter, impede, retard or change the direction and/or velocity of the flow of water, or due to its location, its propensity to snare or collect debris carried by the flow of water, or its likelihood of being carried downstream.

ONE HUNDRED YEAR FLOOD means the Flood having a one percent chance of being equaled or exceeded in any given year (see “BASE FLOOD”).

PERSON (floodplain) means an individual or his agent, firm, partnership, association or corporation, or agent of the aforementioned groups, or this state or its agencies or political subdivisions.

PROGRAM, FLOODPLAIN means the National Flood Insurance Program authorized by 42 U.S.C. 4001-4128

PROGRAM DEFICIENCY means a defect in a community’s Floodplain Management

Regulations or administrative procedures that impairs effective implementation of those Floodplain Management Regulations or of the NFIP standards.

RECREATIONAL VEHICLE, FLOODPLAIN means a vehicle which is:

1. built on a single chassis;
2. 400 square feet or less when measured at the largest horizontal projection;
3. designed to be self-propelled or permanently towable by a light duty truck; and
4. designed primarily not for use as a permanent dwelling but as a temporary living quarters for recreational, camping, travel or seasonal use.

REGULATORY FLOOD ELEVATION means an elevation one foot above the Base Flood Elevation for a Watercourse for which the Base Flood Elevation has been determined and shall be as determined by the criteria developed by the director of water resources for all other Watercourses.

REGULATORY FLOODWAY means the channel of a river or other Watercourse and the adjacent land areas that must be reserved in order to discharge the Base Flood without cumulatively increasing the water surface elevation more than a designated height.

REMEDY A VIOLATION means to bring the Structure or other development into compliance with State or local Floodplain Management Regulations, or, if this is not possible, to reduce the impacts of its noncompliance. Ways that impacts may be reduced include protecting the Structure or other affected development from Flood damages, implementing the enforcement provision of this Ordinance or otherwise deterring future similar violations, or reducing federal financial exposure with regard to the Structure or other development.

REPETITIVE LOSS STRUCTURE means a Structure, covered by a contract for flood insurance issued pursuant to the National Flood Insurance Act, that has incurred Flood-related damage on two occasions during any 10-year period ending on the date of the event for which a second claim is made, in which the cost of repairing the Flood damage, on average, equaled or exceeded 25% of the market value of the Structure at the time of each such Flood event.

SHEET FLOW AREA (see "AREA OF SHALLOW FLOODING").

SPECIAL FLOOD HAZARD AREA means an area in the Floodplain subject to a 1 percent or greater chance of Flooding in any given year. It is shown a Flood Boundary and Floodway Map or Flood Insurance Rate Map as Zone A, AO, A1-30, AE, A99, or AH.

START OF CONSTRUCTION, FLOODPLAIN includes substantial improvement and other proposed development, and means the date the Building Permit was issued, provided the actual start of construction, repair, reconstruction, rehabilitation, addition, placement, or other improvement was within 180 days of the permit date. The actual start means either the first placement of permanent construction of a Structure on a site, such as the pouring of slab or footings, the installation of piles, the construction of columns, or any work beyond the stage of excavation; or the placement of a Manufactured Home on a foundation. Permanent construction does not include land preparation, such as clearing, grading and filling; nor does it include the installation of Streets and/or walkways; nor does it include excavation for a Basement, footings, piers,

or foundations or the erection of temporary forms; nor does it include the installation on the property of accessory Buildings, such as Garages or sheds not occupied as Dwelling Units or not part of the main Structure. For a substantial improvement, the actual start of construction means the first alteration of any wall, ceiling, floor or other structural part of a Building, whether or not that alteration affects the external dimensions of the Building.

STRUCTURE, FLOODPLAIN means a walled and roofed building, including a gas or liquid storage tank that is principally above ground, as well as a Manufactured Home.

VIOLATION means the failure of a Structure or other development to be fully compliant with the community's Floodplain Management Regulations. A Structure or other development without the elevation certificate, other certifications, or other evidence of compliance required in this Ordinance is presumed to be in violation until such time as that documentation is provided

WATER SURFACE ELEVATION means the height, in relation to the National Geodetic Vertical Datum (NGVD) of 1929, North American Vertical Datum (NAVD) of 1988, (or other datum, where specified) of Floods of various magnitudes and frequencies in the Floodplains of Riverine areas.

WATERCOURSE shall mean any lake, river, creek, stream, wash, arroyo, channel, or other topographic feature on or ove**r** which waters flow at least periodically. The term may include specifically designated areas in which substantial flood damage may occur.

WATERCOURSE MASTER PLAN means a hydraulic plan for a Watercourse that examines the cumulative impacts of existing development and future encroachment in the Floodplain and future development in the watershed on potential Flood damages, and establishes technical criteria for subsequent development so as to minimize potential Flood damages for all Flood events up to and including the One Hundred-Year Flood

FLOOR AREA shall mean the total area of a Building measured by taking the outside dimensions of the Building at each floor level intended for occupancy or storage, but excluding courts, Carports, and Garages used for the parking of motor vehicles.

FLYWAY BARRIER: A solid wall, fence, dense vegetation, or combination of these materials at least six feet high that extends at least 10 feet beyond the hives on each end of a bee colony

FOREST MATERIALS STORAGE AND VALUE-ADDED PRODUCTION shall mean any storage, processing or reuse of forest materials including but not limited to wood chips, poles, compost, mulch and bio-fuels.

FRONTAGE shall mean that side of a Lot abutting a Street.

FUNCTIONALLY DEPENDENT USE means a Use which cannot perform its intended purpose unless it is located or carried out in close proximity to water. The term includes only docking facilities, port facilities that are necessary for the loading and unloading of cargo or passengers, and ship Building and ship repair facilities, but does not include long-

term storage or related manufacturing facilities.

GARAGE, PRIVATE shall mean a detached Accessory Building or a portion of a main Building on the same Lot for the parking and temporary storage of vehicles of the occupants of the premises.

GARDENING shall mean areas where residents and neighbors have the opportunity to contribute and manage the cultivation of plants, vegetables, and fruits.

GOVERNING BODY is the local governing unit, i.e. county or municipality, that is empowered to adopt and implement regulations to provide for the public health, safety and general welfare of its citizenry

GRAZING shall mean the feeding of domestic Livestock on an open range or fenced pasture for commercial purposes and uses customarily incidental thereto, but not including slaughterhouses, Feedlots, stockyards, packing houses, bone yards, or plants for the reduction of animal matter.

GROSS AREA shall mean the total horizontal area within the Lot lines of a Lot or parcel of land before public streets, easements or other areas to be dedicated or reserved for public use are deducted from such Lot or parcel.

GROSS VEHICLE WEIGHT shall mean the weight of the vehicle or vehicle combination together with the weight of the maximum load to be carried thereon at any one time; or, the declared gross weight per current vehicle registration.

GROUND COVER shall mean low growing plant materials intended to spread over the ground, and which typically grow to a height of 2 ½' or less. Also, organic or inorganic materials such as bark, crushed rock, cinders, or other similar materials typically use in Landscaped Areas between plantings.

GROUP HOME FOR THE HANDICAPPED shall mean a Dwelling Unit that is licensed or authorized by a governmental authority having jurisdiction over operations for 10 or fewer handicapped persons who reside together as a single housekeeping unit and who receive care, supervision, or counseling from one or more staff persons. This Use includes assisted-living homes, homes for the mentally ill, group care agencies and similar residential living arrangements for handicapped persons, but shall not include boarding houses, nursing homes, or other group homes not for the handicapped. A facility is not a Group Home for the Handicapped unless it meets the provisions of Title VII of the Civil Rights Act of 1968 as amended by the Fair Housing Act.

GROUP HOMES, OTHERS shall mean a Dwelling in which persons reside while receiving therapy or counseling to assist them in overcoming addiction to intemperate use of drugs or alcohol or in adjusting to society after or during imprisonment through such means as pre-release, work-release, or probationary programs. This category does not include a Group Home for the Handicapped.

GUEST HOUSE shall mean a detached habitable Structure used by members of the Family occupying the main Dwelling and their nonpaying guests.

HARDSHIP as related to Section 23.1-8, Variances, of this Ordinance means the exceptional

hardship that would result from a failure to grant the requested Variance. The governing body requires that the hardship be exceptional, unusual, and peculiar to the property involved. Mere economic or financial hardship alone is not exceptional. Inconvenience, aesthetic considerations, physical handicaps, personal preferences, or the disapproval of one's neighbors likewise cannot, as a rule, qualify as an exceptional hardship. All of these problems can be resolved through other means without granting a variance, even if the alternative is more expensive, or requires the property owner to build elsewhere or put the parcel to a different use than originally intended.

HEARING CLERK shall mean the person, or persons, responsible for the receipt of reports from the Zoning Inspector of Code Enforcement Officer that a violation of the Zoning Ordinance exists, schedules Zoning Hearings, and develops and maintains the files of the Hearing Officer.

HEARING OFFICER shall mean a person, or persons, appointed by the Board of Supervisors pursuant to A.R.S. 11-815(E) to hear and determine whether a violation of the Zoning Ordinance exists, and if a violation is found to exist, impose civil penalties in accordance with Section 16.4 of the Zoning Ordinance.

HEIGHT, **TOWER** means the vertical distance from the preexisting Grade at the base of the Tower to the highest point of the Tower including Antennas.

HELIPORT shall mean any area which is used for the landing and taking off of helicopters.

HIGHEST ADJACENT GRADE means the highest natural elevation of the ground surface prior to construction next to the proposed walls of a Structure.

HISTORIC STRUCTURE means any Structure that is:

1. Listed individually in the National Register of Historic Places (a listing maintained by the Department of Interior) or preliminarily determined by the Secretary of the Interior as meeting the requirements for individual listing on the National Register.
2. Certified or preliminarily determined by the Secretary of the Interior as contributing to the historical significance of a registered historic district or a district preliminarily determined by the Secretary to qualify as a registered historic district.
3. Individually listed on a state inventory of historic places in states with historic preservation programs which have been approved by the Secretary of the Interior; or
4. Individually listed on a local inventory of historic places in communities with historic preservation programs that have been certified either;
5. By an approved state program as determined by the Secretary of the Interior; or
6. Directly by the Secretary of the Interior in states without approved programs.

HOME OCCUPATION shall mean any Use customarily conducted entirely within a Dwelling and carried on solely by the inhabitants thereof, which use is clearly incidental and secondary to the Use of the Structure for Dwelling purposes and which use does not change the character thereof or does not adversely affect the uses permitted in the zone of which it is a part. A Home Occupation shall meet all of the requirements of 24.2.

HOSPITAL/HEALTH CLINIC shall mean an institution for the diagnosis, care, and treatment of

human illness, including surgery and primary treatment.

HOTEL - MOTEL shall mean a Structure or portion thereof or a group of attached or Detached Structures containing completely furnished individual guest rooms or suites **typically** occupied less than thirty (30) days, by any one individual or group of individuals, for compensation.

INTENDED USE shall mean a new Use that is not currently taking place on a property but that will begin on the property within a reasonable amount of time as determined solely by the Director of Community Development. A Use is not an Intended Use unless progress toward the new Use is indicated by objectively verifiable evidence.

INOPERABLE VEHICLE shall mean any whole, dismantled or partially dismantled, vehicle which can not be started and driven under its own power.

INSTALLED means attached, or fixed in place, whether or not connected to a power source.

INSTITUTIONAL RESIDENCE shall mean facilities for living, sleeping and sanitation and may include facilities for eating and cooking, for occupancy by other than a Family.

INVASIVE SPECIES shall mean an alien (non-native) species whose introduction does or is likely to cause economic or environmental harm or harm to human health and which tend to disrupt natural ecosystems by displacing native species.

JUNK YARD shall mean the use of more than the allowable square footage of any Lot or parcel of land regardless of Zone classification for the outdoor storage of any used or secondhand materials, including but not limited to lumber, auto parts, household appliances, pipe, fencing, drums, machinery or furniture.

KENNEL, COMMERCIAL shall mean any Kennel maintained for the purpose of boarding, breeding, raising or training dogs or cats for a fee or for sale.

KENNEL, NONCOMMERCIAL shall mean any property where five or more dogs and/or cats, over the age of four months, are kept or maintained for the use and enjoyment of the occupant for noncommercial purposes.

KITCHEN shall mean any room or portion thereof in a Building or Dwelling unit which is used or intended to be used for cooking or the preparation of food.

LANDSCAPE AREA shall mean that part of the property exclusively set aside for living plant materials and associated non-living ornamental materials such as mulch, fencing, walls or decorative rock.

LANDSCAPING shall mean the placement of living plant materials including trees, shrubs, vegetative and organic or inorganic materials in a prescribed area. Organic and inorganic materials include gravel, cinders, rock and bark materials.

LARGE RETAIL ESTABLISHMENT shall mean a retail establishment (store) with any commercial retail uses or a combination of such commercial retail uses comprised of greater than 25,000 square feet and less than 70,000 square feet of gross floor area. The 25,000 square feet of floor area includes gross floor area and ancillary outdoor storage or merchandise display areas. The floor area does not include motor vehicle parking or

loading areas. For the purpose of determining the applicability of the 25,000 square foot of floor area, the aggregate square footage of all adjacent stores which share common check stands, management, a controlling ownership interest, and storage areas, shall be considered one establishment, e.g. a plant nursery associated with a general merchandise area such as a home improvement area.

LIGHTING DEFINITIONS

CLASS 1 LIGHTING means ~~all outdoor~~ lighting used for but not limited to outdoor sales or eating areas, assembly or repair areas, advertising and other Signs, Recreational Facilities and ~~other similar applications where COLOR RENDITION IS IMPORTANT to preserve the effectiveness of the activity.~~ **outdoor lighting used for applications where color rendition is required to preserve the effectiveness of an activity. Recognized Class 1 applications are limited to the following: outdoor sales areas, including service station canopies; primary customer building entry/exit areas (does not include service or emergency entries/ exits); outdoor seating areas at restaurants; outdoor assembly or repair areas where assembly or repair work occurs at night on a regularly scheduled basis; outdoor recreational field/track/arena areas; external and internal lighting for signs.**

CLASS 2 LIGHTING means ~~all outdoor lighting used for but not limited to illumination for walkways, roadways, equipment yards, parking lots and outdoor security where GENERAL ILLUMINATION of the grounds is the primary concern.~~ **outdoor lighting used for applications where general illumination for utility, safety, or security is the primary concern. Examples include but are not limited to lighting for parking areas, roadways, pedestrian walkways, and outdoor security.**

CLASS 3 LIGHTING means any outdoor lighting used for DECORATIVE effects, including but not limited to architectural illumination, flag and monument lighting, and illumination of trees, bushes, landscape features, etc.

~~COMMUNITY DEVELOPMENT DIRECTOR (lighting) shall mean the Director of Community Development for Coconino County, their designee or appointee.~~

~~DIRECT ILLUMINATION means illumination resulting from light emitted directly from a lamp or luminaire, not light diffused through translucent signs or reflected from other surfaces such as the ground or building faces .~~

FIXTURE, FULLY SHIELDED means a light fixture or luminous tube constructed and mounted such that all light emitted by the fixture or tube, either directly from the lamp, tube, or a diffusing element, or indirectly by reflection or refraction from any part of the Luminaire, is projected below the horizontal.

1. A practical ~~working~~ way to determine if a fixture or tube is fully shielded: if the lamp or tube, any reflective surface, or lens cover (clear or prismatic) is visible when viewed from above or directly from the side, from any angle around the fixture or tube, the fixture or tube is not fully shielded.
2. Examples of fixtures that are Fully Shielded (Note: to be fully shielded these fixtures must be closed on top and mounted such that the bottom opening is horizontal):

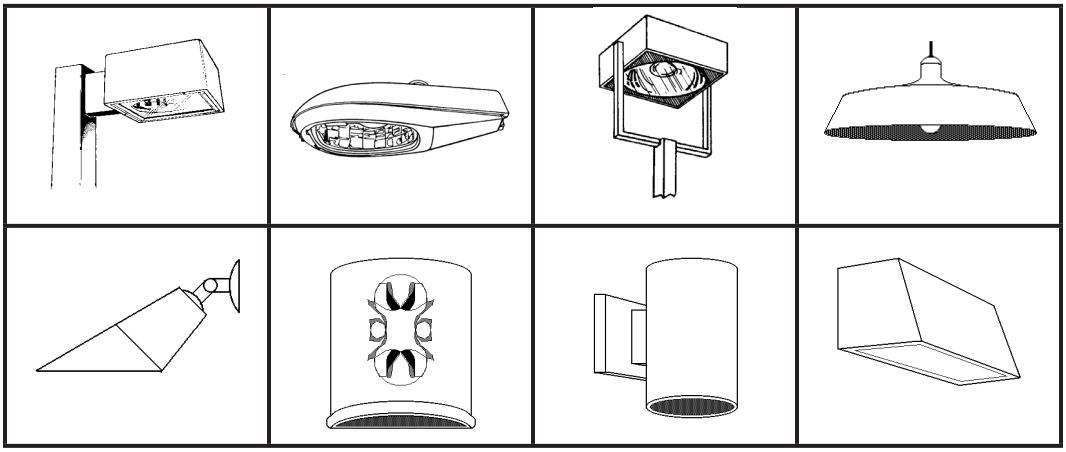

3. Examples of fixtures that are NOT Fully Shielded:

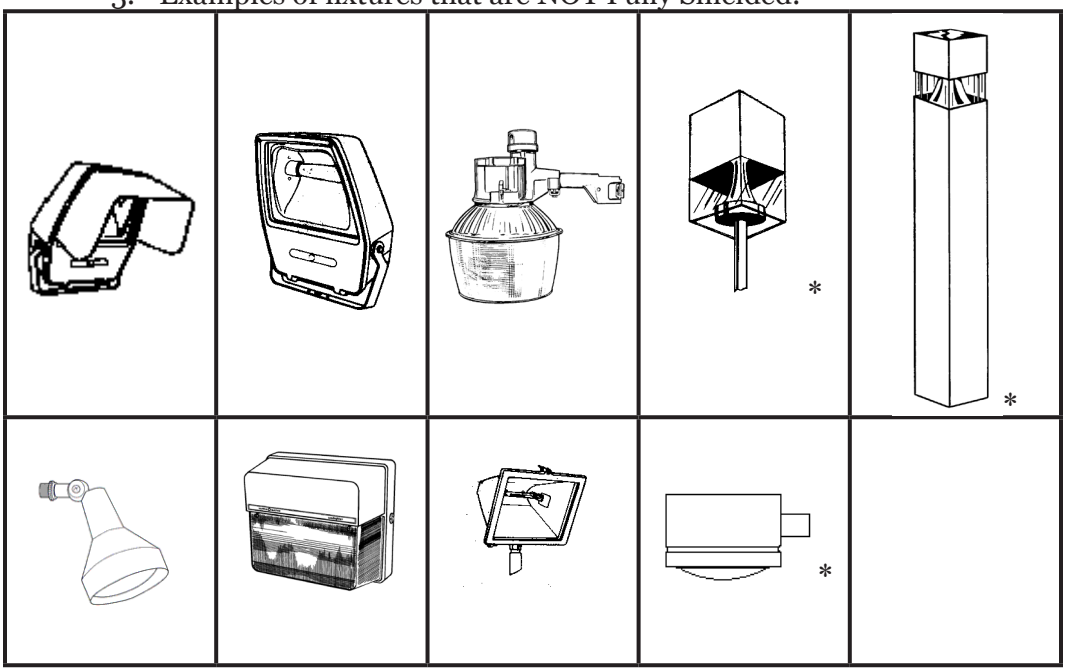

Table Note: even though the lamp in these fixtures is shielded from direct view when viewed from the side or above, reflective surfaces and/or lens covers are directly visible from the side.

4. Note for luminous (neon) tubes: when such lighting is installed under or behind a roof overhang, if the roof-line or eave is not horizontal the tubing may be visible from above when viewed from the side and therefore be unshielded.

FIXTURE, PARTIALLY SHIELDED means a light fixture constructed and mounted such that most light emitted by the fixture, either directly from the lamp or a diffusing element, or indirectly by reflection or refraction from any part of the fixture, is projected below the horizontal. Light emitted at or above the horizontal direction (sideways or upwards) arises

only from incidental decorative elements such as perforations, or strongly colored or diffusing materials such as "honey" or colored glass or plastic. Fixtures using spot or flood lamps or 1000 lumens or less are considered partially shielded if the lamps are aimed no higher than 45 degrees above straight down (half-way between straight down and straight to the side). Examples of partially shielded fixtures include, but are not limited to, those illustrated below:

FLOOD LAMP = spot lamp

HIGH-PRESSURE SODIUM is a type of lamp using sodium and mercury vapor at high pressure to produce light.

HPS = high-pressure sodium.

INSTALLED means attached, or fixed in place, whether or not connected to a power source.

LED means light emitting diode

LED, NARROW-SPECTRUM AMBER: A light emitting diode (LED) with a peak wavelength between 585 and 595 nanometers and a full width at 50 percent power no greater than 15 nanometers.

LIGHT FIXTURE = outdoor light fixture

LOW-PRESSURE SODIUM is a type of lamp using sodium vapor at low pressure to produce light.

LPS = low-pressure sodium.

LUMEN is the unit used to measure the actual amount of visible light that is produced by a lamp.

LUMINAIRE **outdoor light fixture** ~~means the complete lighting assembly, including the lamp, housing, shields, lenses and associated electronics, less the support assembly. A light fixture.~~

LUMINOUS TUBE means a glass tube filled with a gas or gas mixture (including neon, argon, mercury or other gasses), usually of small diameter (10-15 millimeter), caused to emit light by the passage of an electric current, and commonly bent into various forms for use as decoration or signs. A "neon" tube. Does not include ~~common~~ fluorescent ~~tubes~~ **lamps**.

LIGHT POLLUTION is any adverse effect of manmade lighting; light where it is not needed or wanted; wasted light.

METAL HALIDE is a type of lamp using mercury and metal halide(s) to produce light.

MH = metal halide.

OUTDOOR LIGHT FIXTURE means an outdoor electrically powered illuminating device, **including one or more lamps, luminous tubes or LEDs, the**

associated housing, shields, lenses and electronics, less the support assembly, ~~outdoor lighting or reflective surface, lamp, luminous tube or and similar devices,~~ either permanently installed or portable, which is used for illumination**,** **decoration** or advertisement. Such devices shall include, but are not limited to, search, spot and flood lights for:

1. Buildings and Structures
2. recreational areas
3. parking lot lighting
4. Landscape and architectural lighting
5. Billboards and other Signs (advertising or other)
6. Street lighting
7. product display area lighting
8. Building overhangs and open canopies
9. pedestrian walkways or areas
10. Building or Landscape decoration

NEON TUBE (see Luminous Tube)

SPOT LAMP means a lamp designed to direct its output in a specific direction (a beam) with a reflector formed from the glass envelope of the lamp itself (see below).

TEMPORARY LIGHTING means lighting which does not conform to the provisions of this Ordinance and which will not be used for more than one thirty (30) day period within a calendar year. Temporary lighting is intended for uses which by their nature are of limited duration; e.g. civic events, or construction projects.

TOTAL OUTDOOR LIGHT OUTPUT means the maximum total amount of light, measured in lumens, from all Outdoor Light Fixtures on a project site. Includes all lights and luminous tubing used for Class 1, Class 2, Class 3 lighting, and lights used for external illumination of Signs, but does not include lights used to illuminate internally illuminated Signs or luminous tubing used in neon signs. For lamp types that vary in their output as they age (such as high pressure sodium, metal halide, and fluorescent), the initial output, as defined by the manufacturer, is the value to be considered. For luminous tubes, output is calculated per linear foot of tubing rather than per lamp.

LIVESTOCK shall mean all animals that are used as (or which are the sources of) agricultural commodities. Included are cattle (beef or dairy), bison, equines (all horses, mules, burros, and asses), sheep, goats, swine (excluding feral pigs), **camelids a**nd poultry (which includes ratites).

LOT shall mean:

1. A parcel of real property with a separate and distinct number or other designation shown on a plan recorded in the office of the County Recorder, or
2. A Parcel of real property delineated on an approved record of survey, Parcel map or subdivision map as filed in the office of the County Recorder or in the office of the ~~Department of~~ Community Development **Department**, and Abutting at least one (1) public Street or Right-Of-Way, or Easement determined by the Commission to be

adequate for the purpose of Access, or

3. A parcel of real property abutting at least one (1) public Street or Right-of-Way or Easement determined by the Commission to be adequate for the purpose of Access and held under separate ownership from Abutting property prior to the date of adoption of this Ordinance.

LOT, CORNER shall mean a Lot located at the intersection or interception of two (2) or more Streets at an angle of not more than one hundred thirty-five (135) degrees. If the angle is greater than one hundred thirty-five (135) degrees, the Lot shall be considered an Interior Lot.

LOT (SITE) COVERAGE shall mean that portion of a Lot or Building Site which is occupied by any Building or Structure footprint, excepting paved areas, uncovered parking areas, driveways, walks, **at grade patios** and landscaped areas.

LOT DEPTH shall mean the average horizontal distance between the Front and Rear Lot Lines measured in the mean direction of the side Lot lines.

LOT, FLAG shall mean an Interior Lot not having direct Frontage to a public Street or highway, except for a portion of said Lot used for Access purposes. That portion of a Flag Lot used for Access purposes shall have a minimum width of twenty feet.

LOT, INTERIOR shall mean a Lot other than a corner Lot.

LOT LINE shall mean any line bounding a Lot as herein defined.

LOT LINE, FRONT on an Interior Lot shall mean the property line Abutting the Street. On a corner Lot, the Front Lot Line is the shorter property line Abutting a Street, except in those cases where the subdivision or parcel map specifies another line as the Front Lot Line. On a through Lot or a Lot with three (3) or more sides Abutting a Street or a Corner Lot with Lot Lines of equal length, the Director shall determine which property line shall be the Front Lot Line for purposes of compliance with Yard and Setback provisions of this Ordinance. On a private Street or Easement, the Front Lot Line shall be designated as the edge of the Easement.

~~LOT LINE, INTERIOR shall mean a Lot Line not Abutting a Street.~~

LOT LINE, REAR shall mean a Lot Line not Abutting a Street which is opposite and most distant from the Front Lot Line. In the case of an irregular-shaped Lot, a line within the Lot, parallel to and at a maximum distance from the Front Lot Line, having a length of not less than ten (10) feet. A Lot which is bounded on all sides by Streets may have no Rear Lot Lines.

LOT LINE, SIDE shall mean any Lot Line which is not a Front or Rear Lot Line.

LOT, SIZE the area contained within the boundaries lines of a Lot including Easements.

LOT, THROUGH shall mean a Lot having Frontage on two dedicated parallel or approximately parallel Streets.

LOT WIDTH shall mean the horizontal distance between the Side Lot Lines, measured at right angles to the Lot Depth at a point midway between the Front and Rear Lot Lines. The

strip of land used for Access or utilities shall not be included in the calculation of Lot Width.

LOWEST FLOOR means the lowest floor of the lowest enclosed area (including Basement). An unfinished or Flood resistant enclosure, usable solely for parking of vehicles, Building Access or storage in an area other than a Basement area is not considered a Building's lowest floor; provided, that such enclosure is not built so as to render the Structure in violation of the applicable non-elevation design requirements of this Ordinance.

MANUFACTURED HOME shall mean a factory built Dwelling Unit constructed after June 15, 1976 to standards established by the U.S. Department of Housing and Urban Development (HUD) with a HUD seal affixed, and which is designed to be used as a year-round Dwelling when connected to the required utilities. A Manufactured Home does not include Mobile Homes, Travel Trailers, Park Models or Recreational Vehicles.

MANUFACTURED HOME PARK shall mean any area or tract of land where one or more Manufactured or Mobile Home spaces are rented or leased or held out for rent or lease to accommodate Manufactured or Mobile Homes used for habitation.

MANUFACTURED HOME SPACE shall mean a plot of ground within a Manufactured Home Park designed for the accommodation of one Manufactured or Mobile Home.

MARKET VALUE shall be determined by estimating the cost to replace the Structure in new condition and adjusting that cost figure by the amount of depreciation which has accrued since the Structure was constructed. The cost of replacement of the Structure shall be based on a square foot cost factor determined by reference to a Building cost estimating guide recognized by the Building construction industry. The amount of depreciation shall be determined by taking into account the age and physical deterioration of the structure and functional obsolescence as approved by the Floodplain Administrator, but shall not include economic or other forms of external obsolescence. Use of replacement costs or accrued depreciation factors different from those contained in recognized Building cost estimating guides may be considered only if such factors are included in a report prepared by an independent professional appraiser and supported by a written explanation of the differences. MEAT PROCESSING, GAME shall mean the preparation of meat for human consumption by a processor or slaughterer regulated by the Arizona Department of Agriculture through an Exempt Processing License under A.R.S. § 3-2001(11) whose products are specifically labeled "not for sale."

MEAN SEA LEVEL means, for purposes of the National Flood Insurance Program, the National Geodetic Vertical Datum (NGVD) of 1929, North American Vertical Datum (NAVD) of 1988, or other datum, to which Base Flood Elevations shown on a community's Flood Insurance Rate Map are referenced.

MEAT PROCESSING, SMALL shall mean the preparation of meat for human consumption as regulated by the Arizona Department of Agriculture for sale only within the state of Arizona.

MEAT RECEIVING FACILITY, GAME shall mean a mobile refrigeration unit for the collection of game meat to be processed at a separate location.

MEDICAL MARIJUANA DISPENSARIES AND OFF-SITE CULTIVATION FACILITIES DEFI-

NITIONS ~~- See Section 24.9~~

MEDICAL MARIJUANA: All parts of any plant of the genus cannabis whether growing or not, and the seeds of such plant that may be administered to treat or alleviate a qualifying patient's debilitating medical condition or symptoms associated with the patient's debilitating medical condition.

MEDICAL MARIJUANA DISPENSARY: A not-for-profit entity defined in ARS §36-2801(11) that acquires, possesses, cultivates, manufactures, delivers, transfers, transports, supplies, sells, or dispenses marijuana or related supplies and educational materials to qualifying patients or their designated caregivers.

MEDICAL MARIJUANA INFUSION FACILITY: A facility that incorporates Medical Marijuana by means of cooking, blending, or incorporation into consumable/edible goods.

MEDICAL MARIJUANA OFF-SITE CULTIVATION LOCATION: A Building, Structure, or premises associated with, but separate from a Medical Marijuana Dispensary where cultivation, storage, infusion, and/or manufacture of Medical Marijuana products is accomplished.

METAL STORAGE CONTAINERS are defined as prefabricated, portable metal containers used for storage of personal property.

METEOROLOGICAL (MET) TOWER shall mean Structures used to mount atmospheric sensors to measure wind and other local conditions.

MOBILE HOME shall mean a factory built Dwelling Unit constructed prior to June 15, 1976, on a permanent chassis, capable of being transported in one or more sections and designed to be used with or without a permanent foundation as a residence. Mobile Homes do not include Recreational Vehicles, Travel Trailers, or Manufactured Homes.

MODULAR HOME shall mean a factory built Dwelling Unit which conforms to the following:

1. Built to the building code as adopted by Coconino County;
2. Built with exterior materials customarily used on conventional Site built Dwellings; e.g. wood siding, asphalt roof shingles;
3. Minimum roof pitch of 3 in 12;
4. Minimum one (1) foot overhangs on all four sides;
5. Minimum width of 20 feet; and
6. Constructed to be set on a permanent foundation similar to Site built Dwellings; e.g. footings and stem walls or piers, in compliance with the building codes as adopted by Coconino County.

MORTUARY shall mean a place for the storage of human or animal bodies prior to their burial or cremation. These uses may include crematoriums.

MOTEL shall mean the same as "Hotel".

NATIVE PLANTS shall mean plant species occurring naturally and native to a given ecosystem or plant community.

NET AREA shall mean the total horizontal area within the property lines of a Lot or parcel of

land excluding all vehicular access ways except those private easements which serve as primary access to no more than four individual Lots or parcels.

NEW CONSTRUCTION shall mean structures for which the "start of construction" commenced on or after the effective date of this Ordinance.

NEW MANUFACTURED HOME PARK or SUBDIVISION means a Manufactured Home Park or subdivision for which the construction of facilities for servicing the Lots on which the Manufactured Homes are to be affixed (including at a minimum, the installation of utilities, the construction of Streets, and either final site grading or the pouring of concrete pads) is completed on or after the effective date of Floodplain Management Regulations adopted by the community

NONCONFORMING SITUATIONS DEFINITIONS ~~- See Section 29~~

NONCONFORMING SITUATION shall mean a situation that occurs when, on the effective date of adoption of this Ordinance or a previous ordinance or on the effective date of a Zoning Ordinance text amendment or a zoning map change, an existing Lot or Structure or Use of an existing Lot or Structure does not conform to one or more of the regulations applicable to the district in which the Lot or Structure is located. A Nonconforming Situation may be any of the following.

NONCONFORMING USE shall mean a Use or activity which was lawful prior to the adoption, revision, or amendment of the Zoning Ordinance or zoning map, but which is unlawful by the use regulations applicable to the district in which the property is located.

NONCONFORMING LOT shall mean a Lot, the area or dimensions of which was lawful prior to the adoption, revision, or amendment of the Zoning Ordinance or zoning map, but which fails by reason of such adoption, revision, or amendment to conform to the present requirements of the zoning district.

NONCONFORMING SIGN shall mean any Sign lawfully existing on the effective date of the Zoning Ordinance or any amendment thereto which fails by reason of such adoption or amendment to conform to all standards and regulations of the Ordinance.

NONCONFORMING STRUCTURE OR BUILDING shall mean a Structure or Building the size, dimensions, or location of which was lawful prior to the adoption, revision, or amendment of the Zoning Ordinance but which fails by reason of such adoption, revision, or amendment to conform to the present regulations applicable to the zone in which the property is located.

NONCONFORMING PROJECT shall mean any Structure, development, or undertaking that is incomplete on the effective date of this Ordinance or any amendment thereto or of any zoning map change and which would be inconsistent with any regulation applicable to the zone in which it is located if completed as proposed or planned.

NOXIOUS WEEDS shall mean plant species designated as such by the Secretary of Agriculture, Secretary of the Interior, or by State law or regulation. Generally, noxious weeds will possess one or more of the characteristics of being aggressive and difficult to manage, parasitic, a carrier or host of serious insects or disease, and being non-native or new to or not

common to the United States or parts thereof. Noxious Weed species have extensive and costly impacts on human health, safety, commerce, recreation, and general well-being. Noxious weeds can adversely affect food production, wilderness values, wildlife habitat, visual quality, forage production, reforestation, recreational opportunities, natural wildfire regimes, and land values.

NUISANCE shall mean an interference with the enjoyment and use of a property.

NUISANCE PER SE shall mean a violation of any provision of this Ordinance, regardless of the degree of severity, which is a nuisance pursuant to A.R.S. 11-815 and 13-2917.

OFF-HIGHWAY VEHICLE (OHV) shall mean any motorized vehicle designed for use off paved roadways, and shall include motorcycles, motorbikes, three-wheelers, quads, four-wheel-drive vehicles, snowmobiles, go carts, sandrails, **UTVs** and any similar vehicle.

OFF-HIGHWAY VEHICLE FACILITY shall mean a track or other constructed facility, generally with berms, hills, banked turns, and other grading, but possibly created by simply driving over an area to create a track over which vehicles would traverse repetitively for recreational purposes. The facility may be for either personal or commercial use.

OUTDOOR RECREATION FACILITY means an area designed for active recreation, whether publicly or privately owned, including, but not limited to, baseball diamonds, soccer and football fields, golf courses, tennis courts and swimming pools.

OVERLAY ZONE shall mean a zoning district that encompasses one or more underlying zones and that imposes additional requirements above that required by the underlying zone.

PARK MODEL shall mean a Recreational Vehicle, typically 12 feet in width that is built on a single chassis, mounted on wheels, designed to be connected to utilities necessary for operation of installed fixtures and appliances, and has a gross trailer area of not less than 320 square feet and not more than 400 square feet, except that it does not include fifth wheel trailers.

PARKING AREA shall mean an area designed and constructed for the parking, storage and maneuvering of vehicles.

PARKING SPACE shall mean a space within a public or private parking area, exclusive of driveways, ramps, columns, offices and work areas, which space is for the temporary parking or storage of one motor vehicle.

PERSON means any individual, lessee, owner, or any commercial entity including but not limited to firm, business, partnership, joint venture, or corporation.

PERFORMANCE STANDARD shall mean criteria or limits relating to certain characteristics that a particular use or process many not exceed. A Conditional Use Permit may be applied for in order to request a waiver or change to Performance Standards.

PLANT UNIT shall mean a method of identifying Landscaping requirements. Alternative plant units are set forth in Section 28.7.

POULTRY A domesticated bird that is used to produce meat or eggs, including but

not limited to chickens, hens, roosters, ducks, turkeys, peafowl and geese.

PRE-SCHOOL shall mean the use of any Building or Structure, in conjunction with any child care arrangement that provides care, supervision, education or instruction for more than six (6) preschool-aged children.

PRINCIPAL USE shall mean the primary or predominant use of any Lot or parcel.

RECREATION FACILITIES shall mean those buildings, structures or areas built or developed for purposes of entertaining, exercising or observing various activities participated in either actively or passively by individuals or organized groups.

RECREATIONAL VEHICLE shall mean a vehicular type unit primarily designed as temporary living quarters for recreational, camping or travel use, which either has its own motive power or is mounted on or drawn by another vehicle.

RECREATIONAL VEHICLE PARK shall refer to facilities for the temporary storage, parking and maneuvering of Recreational Vehicles (motor homes, Travel Trailers, campers, etc.) with adequate roads and stall sites, including sanitary and water facilities. Site locations are generally provided on a day-by-day basis. This use does not constitute a Manufactured Home Park.

RECYCLING CENTER shall mean a Building or Site within which recoverable resources are collected, separated, and processed prior to shipment to others for use in the manufacture of new products. A recycling center does not include Junk Yards.

RECYCLING-COLLECTION POINT shall mean an accessory use that serves as a neighborhood drop-off point for temporary storage of recoverable resources. Such facilities would consist of small enclosed containers, and would generally be located in shopping center parking lots or other public/quasi-public area such as at schools or churches.

RESTAURANT shall mean an establishment in which the principal use is to serve~~s~~ food and/or beverages for consumption onsite.

RESTAURANT, DRIVE-IN/THRU shall mean an establishment that primarily delivers prepared food and/or beverages to customers in motor vehicles or to customers at a service window for consumption either on or off the premises.

RIGHT-OF-WAY shall mean land dedicated to public use for pedestrian, equestrian and vehicular movement, which may also accommodate public utilities, that is either publicly owned or subject to a public Easement. See County Engineer Design and Construction Manual.

RIVERINE means relating to, formed by, or resembling a river (including tributaries), stream, brook, etc

RURAL PLANNING AREA shall mean an area created by petition of owners of a majority of the property to prepare a plan that emphasizes voluntary, nonregulatory incentives for accommodating the continuation of traditional rural and agricultural enterprises; designated by the Board of Supervisors under A.R.S. § 11.806.D.3.

SANITATION STATION shall mean a location with purpose of promoting hy-